Electronic Tachometer for Capturing and Display of Rotational speed

TA200

Features

Model	LED-Tachometer for rpm and speed
Connection	One-channel, digital sensor Floating impulse contacts
Functions	Pulse valuation programmable from 0.0001 to 9999.99 Sensor logic programmable Frequencies processed up to 40 kHz Period duration measurement

Order designation

Order no.	Voltage
1	24 / 48 VAC
2	115 / 230 VAC
3	24 VDC 5% RW

TA200.00 ☐ AXA1

Mechanical data

Display	7-segment LED-display 6-digit display of real values, 14 mm high Decimal point programmable Display suppression of preceding zeroes
Operation, keypad	Front membrane with short-stroke keys
Front dimensions	DIN housing 96 x 48 mm
Mounting	Front-panel installation, by means of clamping frame
Weight	AC: approx. 350 g DC: approx. 250 g
Connection	Plug-in screw terminals Grid 5.08 mm
Core cross-section	Max. 1,5 mm^2
Housing material	Macrolon 6485 (PC) black, UL 94V-0
Front membrane	Polyester

Ambient conditions

Ambient temperature	0...+50 °C
Storage temperature	-20...+70 °C
Relative humidity	Max. relative humidity 80 %, at 25°C, non-condensing
Protection	Front IP 65 to DIN 40050
General rating	EN 61010 Part 1 - Protection standard II - Overvolt. protection categ. II - Contamination factor 2
Interference immunity	EN 50082-2
Emitted interference	EN 50081-1

Block diagram

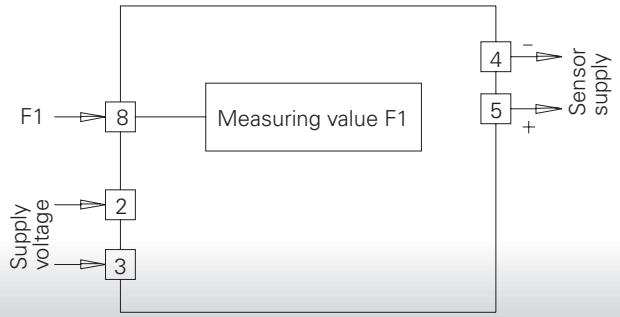

Electrical data

Supply voltage	Choice of two voltages (AC) via switch on device. 115 / 230 VAC ±10% (50 / 60 Hz) 24 / 48 VAC ±10% (50 / 60 Hz) 24 VDC ±10% 5% residual ripple
Power consumption	7 VA, 5 W
Sensor supply	12...26 VDC / max. 100 mA
Signal input	Comparator input PNP-, NPN-logic Voltage level 4...40 V Input resistance 3 kOhm
Input frequency	F1 can be programmed 40 kHz / 25 Hz
Data storage	> 10 years via EEPROM

Pin assignment

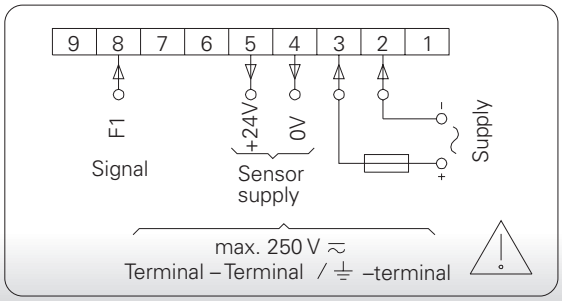

Accessories

Order no.	
Z 001.09A	Blind front panel
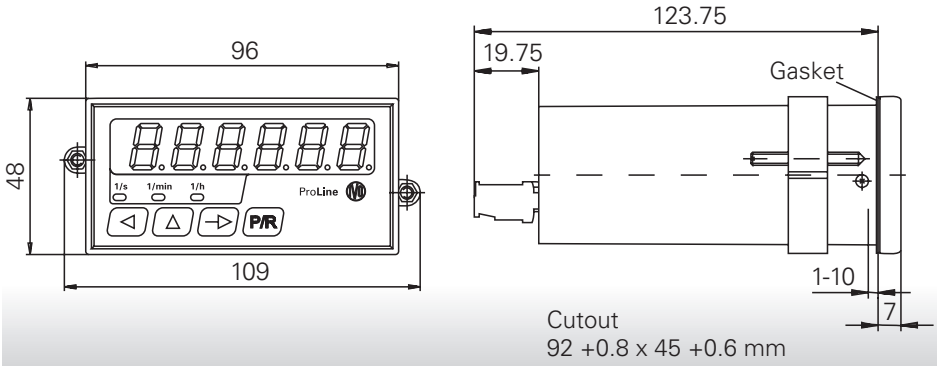
Dimensions