Electronic Tachometer with Calculation functions

TA201

Features

Model	LED-Tachometer for two rational speeds
Connections	Incremental encoder Two one-channel, digital sensors Floating impulse contacts
Functions	Ratio display Pulse valuation programmable from 0.0001 to 9999.99 Input F1 with phase evaluation Period duration measurement

Order designation

Order no.	Voltage
1	24 / 48 VAC
2	115 / 230 VAC
3	24 VDC

TA201.00 ☐ AXA1

Mechanical data

Display	7-segment LED-display 6-digit display of real values, 14 mm high Decimal point programmable Display suppression of preceding zeroes
Operation, keypad	Front membrane with short-stroke keys
Front dimensions	DIN housing 96 x 48 mm
Mounting	Front-panel installation, by means of clamping frame
Weight	AC: approx. 350 g DC: approx. 250 g
Connection	Plug-in screw terminals Grid 5.08 mm
Core cross-section	Max. 1.5 mm^2
Housing material	Macrolon 6485 (PC) black, UL 94V-0
Front membrane	Polyester

Ambient conditions

Ambient temperature	0...+50 °C
Storage temperature	-20...+70 °C
Relative humidity	Max. relative humidity 80 %, at 25 °C, non-condensing
Protection	Front IP 65 to DIN 40050
General rating	EN 61010 Part 1 - Protection standard II - Overvolt. protection categ. II - Contamination factor 2
Interference immunity	EN 50082-2
Emitted interference	EN 50081-1

Application

Two tachometer units allow to capture and display for example rotational speeds and speed at "F1" and "F2" as well as to use a calculation function programmed by the operator that can be selected via "F3" and will then be displayed.
The calculator function enables displaying ratio, difference, stretching/compression, throughput time and time measurement by start and stop signal, period and impulse duration or impulse rate.

Block diagram

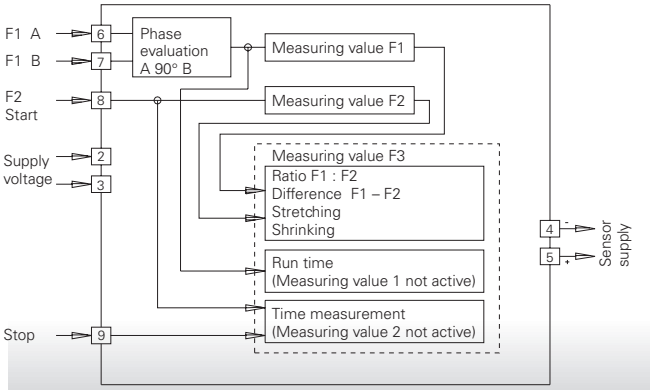

Electrical data

Supply voltage	Choice of two voltages (AC) via switch on device. 115 / 230 VAC ±10% (50 / 60 Hz) 24 / 48 VAC ±10% (50 / 60 Hz) 24 VDC ±10% 5% residual ripple
Power consumption	7 VA, 5 W
Sensor supply	12...26 VDC / max. 100 mA
Signal inputs	Comparator inputs PNP-, NPN-logic Voltage level 4...40 V Input resistance 3 kOhm
Input frequency	F1/F2 10 kHz / 40 kHz or 25 Hz
Control inputs	Control inputs for Start, Stop
Data back-up	> 10 years via EEPROM

Pin assignment

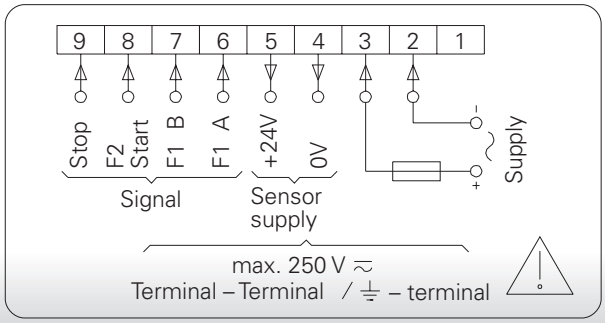

Calculation functions of outputs F1, F2

- Difference F1 - F2
- Ratio F1 : F2
- Stretching/compression (F2 - F1) : F1
- Throughput time
- Time measurement with start and stop signal
- Period duration
- Impulse duration
- Impulse rate measurement

Accessories

Order no.
Z 001.09A Blind front panel
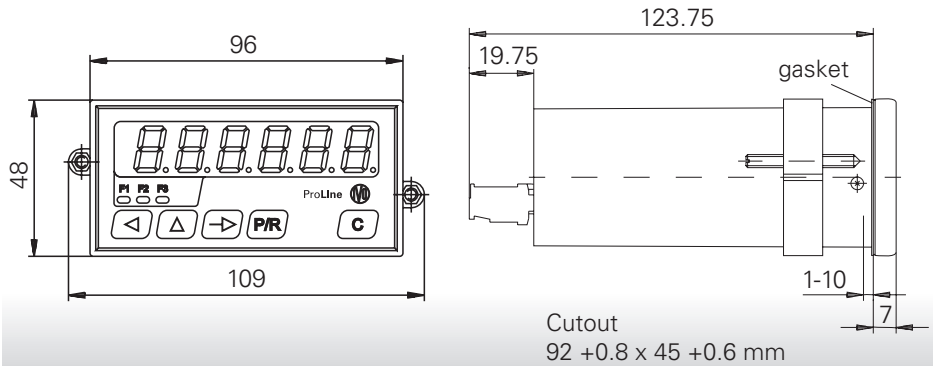
Dimensions