Universal Type 5850

- Highest shock resistance on the market (≥2500 m/s^2, 6 ms acc. to DIN IEC 68-2-27)
- SSI, parallel or current (4 ... 20 mA) interface
- Divisions: up to 16384 (14 bits), singleturn
- Housing Ø 58 mm
- IP 65
- Various options (e.g. LATCH, SET...)
- Gray, Binary or BCD code
- Temperature and ageing compensation
- Short-circuit proof outputs
- Patented new type of construction integrates all components; use of an opto-asic and 6-layer multilayer technology now on just a single PCB with resolution of up to 14 bits.
- 4 ... 20 mA output
- Ex available as explosion proof zone 2 and 22

Mechanical characteristics:

Speed:	max. 12000 min^{-1}
Rotor moment of inertia:	appr. 1,8 x 10^{-6} kgm^2
Starting torque:	< 0,01 Nm
Radial load capacity of shaft:	80 N
Axial load capacity of shaft::	40 N
Weight:	appr. 0,4 kg
Protection acc. to EN 60 529:	IP 65
Working temperature:	-20° C ... +85 °C[1)]
Operating temperature:	-20° C ... +90 °C[1)]
Shaft:	stainless steel
Shock resistance acc. to DIN-IEC 68-2-27	2500 m/s^2, 6 ms
Vibration resistance acc. to DIN-IEC 68-2-6:	100 m/s^2, 10...2000 Hz

1) 80 °C with cable

Divisions and code types available at short notice

Gray/Binary
250, **360**, 500, **720**, 900, **1000**, **1024** (10 Bit), 1250, 1440, 1800, 2000, 2500, 2880, **3600**, 4000, **4096** (12 Bit), 5000, 7200, **8192** (13 Bit), **16384** (14 Bit)

BCD
250, **360** , 500, **720**, 900, **1000**, **1024**, 1250, 1440, 1800, 2000
Other on request

Preferred divisions are bold
(reduced delivery time).

Electrical characteristics SSI or parallel interface:

Interface type:	Synchronous-Serial (SSI)	Synchronous-Serial (SSI)	Parallel	Parallel
Supply voltage (U_B):	5 V DC (± 5 %)	10 ... 30 V DC	5 V DC (± 5 %)	10 ... 30 V DC
Output driver:	RS 485	RS 485	Push-pull	Push-pull
Current consumption typ.:	89 mA	89 mA	109 mA	109 mA
(no load) max.:	138 mA	138 mA	169 mA	169 mA
Permissible load/channel:	max. +/- 20 mA	max. +/- 20 mA	max. +/- 10 mA	max. +/- 10 mA
Word change frequency	max. 15.000/s	max.15.000/s	40.000/s	40.000/s
SSI pulse rate min./max.:	100 kHz/500 kHz	100 kHz/500 kHz	-	-
Signal level high:	typ. 3,8 V	typ. 3,8 V	min.3,4 V	min. U_B – 2,8 V
Signal level low (I_{Load} = 20 mA):	typ. 1,3 V	typ. 1,3 V	-	-
(I_{Load} = 10 mA):	-	-	max. 1,5 V	max. 1,8 V
(I_{Load} = 1 mA):	-	-	max. 0,3 V	-
Rise time t_r (without cable):	max. 100 ns	max. 100 ns	max. 0,2 µs	max. 1 µs
Fall time t_f (without cable):	max. 100 ns	max. 100 ns	max. 0,2 µs	max. 1 µs
Short circuit proof outputs:[1)]:	yes	yes[2)]	yes	yes
Reverse connection protection at U_B:	no	yes	no	yes
Conforms to CE requirements acc. to EN 61000-6-1, EN 61000-6-4 and EN 61000-6-3				

1) When supply voltage correctly applied
2) Only one channel at a time: when U_B = 5 V DC, short-circuit to channel, 0 V or U_B is permitted.
When U_B = 10 ... 30 V DC short-circuit to channel or 0 V is permitted.

Universal Type 5850

Electrical characteristics current interface 4 ... 20 mA

Sensor part		
Interface type:	4 ... 20 mA	4 ... 20 mA
Supply voltage (U_B):	10 ... 30 V DC	5 V DC
Current consumption typ.:	70 mA	70 mA
(no load) max.:	84 mA	84 mA
Word change frequency:	max. 15.000/s	max. 15.000/s

Current loop	
Supply voltage:	10 ... 30 V DC
Analogue signal:	4 ... 20 mA
max. input resistance of the input circuit:	200 Ω
Measuring rage:	0 ... 360 °
Max. Failure (25 °C):	0,2 °
Resolution:	13 Bit
Building up time:	max. 2 ms
Temperature coefficient:	0,1°/10 K
Current if detector error:	≤ 3,5 mA
Sensor and current loop are galvanically insulated	
Conforms to CE requirements acc. to EN 61000-6-1, EN 61000-6-4 and EN 61000-6-3	

Control inputs:

Up/down input to switch the counting direction

As a standard, absolute encoders deliver increasing code values when the shaft rotates clockwise (cw), when looking from the shaft side. When the shaft rotates counter-clockwise (ccw), the output delivers accordingly decreasing code values. The same applies to models with current interfaces. When the shaft rotates clockwise, the output delivers increasing current values, and decreasing values when it rotates counter-clockwise.

As long as the Up/down input receives the corresponding signal (high), this feature is reversed. Clockwise rotation will deliver decreasing code/current values while counter-clockwise rotation will deliver increasing code/current values.

The response time is : for 5 V DC supply voltage, 0.4 ms
for 10-30 V DC supply voltage, 2 ms.

Switching level of the control inputs:

Supply voltage:	5 V DC	10 ... 30 V DC
low	≤1,7 V	≤ 4,5 V
high	≥3,4 V	≥8,7 V

SET input

This input is used to reset (to zero) the encoder. A control pulse (high) sent to this input allows storing the current position value as new zero position in the encoder.
For models equipped with a current interface, the analogue output (4 ... 20 mA) will be set accordingly to the value 4 mA.
Note : before activating the SET input after supplying the encoder with the supply voltage, a counting direction (cw or ccw) must be defined univocally on the Up/down input!

The response time is : for 5 V DC supply voltage, 0.4 ms
for 10 ... 30 V DC supply voltage, 2 ms.

LATCH input

This input is used to „freeze“ the current position value. The position value will be statically available on the parallel output as long as this input will remain active (high).

The response time is : for 5 V DC supply voltage, 140 µs,
for 10 ... 30 V DC
supply voltage, 200 µs.

Universal Type 5850

Terminal assignment (SSI interface with 12pin plug or cable):

Sig.:	0V	+UB	+T	-T	+D	-D	ST	VR					⏚	
Col.:	WH	BN	GN	YE	GY	PK	BU	RD	BK	VT	GY PK	RD BU		
Pin:	1	2	3	4	5	6	7	8	9	10	11	12	PH	

T: Clock signal
D: Data signal
ST: SET input. The current position value is stored as new zero position.
VR: Up/down input. As long as this input is active, decreasing code values are transmitted when shaft turning clockwise.
PH: Plug housing
Insulate unused outputs before initial start-up.

Terminal assignment (Parallel interface, up to 13 bits and max. 2 options, 17 pin plug):

Sig.:	0V	+UB	1	2	3	4	5	6	7	8	9	10	11	12	13	ST/ VR	VR/ LH		⏚	
Col.:	WH	BN	GN	YE	GY	PK	BU	RD	BK	VT	GY PK	RD BU	WH GN	BN GN	WH YE	YE BN	WH GY			
Pin:	1	2	3	4	5	6	7	8	9	10	11	12	13	14	15	16	17		PH	

Terminal assignment (Parallel interface, 14 bits and max. 2 options, cable version):

Sig.:	0V	$+U_B$	1	2	3	4	5	6	7	8	9	10	11	12	13	ST/ VR	VR/ LH	14	⏚	
Col.:	WH	BN	GN	YE	GY	PK	BU	RD	BK	VT	GY PK	RD BU	WH GN	BN GN	WH YE	YE BN	WH GY	GY BN		

Terminal assignment (Parallel interface, 14 bits, 1 option, 17 pin plug):

Sig.:	0 V	$+U_B$	1	2	3	4	5	6	7	8	9	10	11	12	13	ST/ VR/ LH	14	⏚	
Pin:	1	2	3	4	5	6	7	8	9	10	11	12	13	14	15	16	17	PH	

Sig.: 1 =MSB; 2 = MSB-1; 3 = MSB-2 etc.
ST: SET input. The current position value is stored as new zero position.
VR: Up/down input. As long as this input is active, decreasing code values are transmitted when shaft turning clockwise.
LH: LATCH input. High active. The current position is „frozen". It is statically available at the parallel output.
PH: Plug housing
Insulate unused outputs before initial start-up.

Terminal assignment (Current interface 4 ... 20 mA, 12pin plug):

Sig.	0V	+UB	—	—	I+	I-	ST	VR					⏚
Col.:	WH	BN	GN	YE	GY	PK	BU	RD	BK	VT	GY PK	RD BU	
Pin:	1	2	3	4	5	6	7	8	9	10	11	12	PH

+I: Input of the current loop
-I: Output of the current loop
ST: SET input. The output current is set to 4 mA.
VR: Up/down input. As long as this input is active, decreasing current values are transmitted when shaft turning clockwise.
PH: Plug housing
Insulate unused outputs before initial start-up.

Universal Type 5850

Dimensions:
Clamping flange with Shaft ø 10

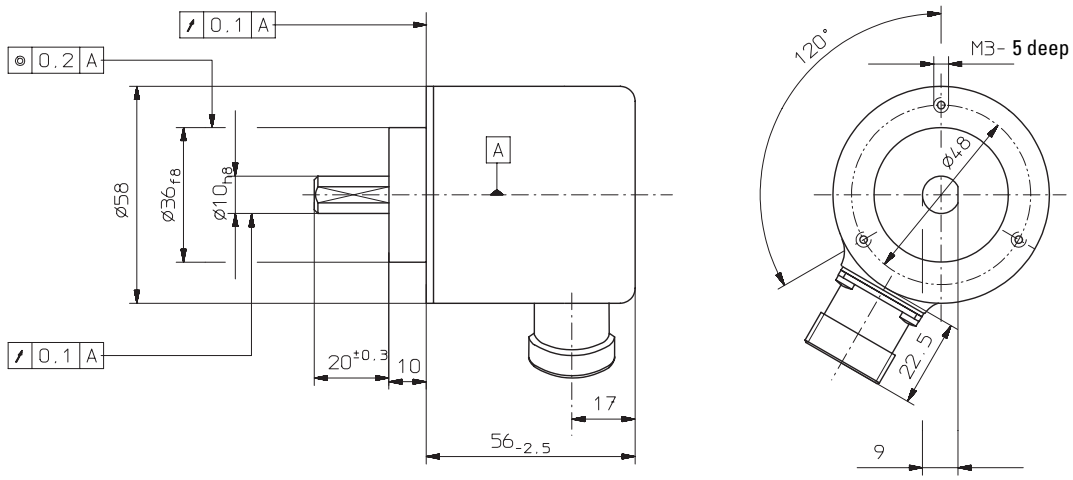

Synchronous flange with shaft ø 6 mm

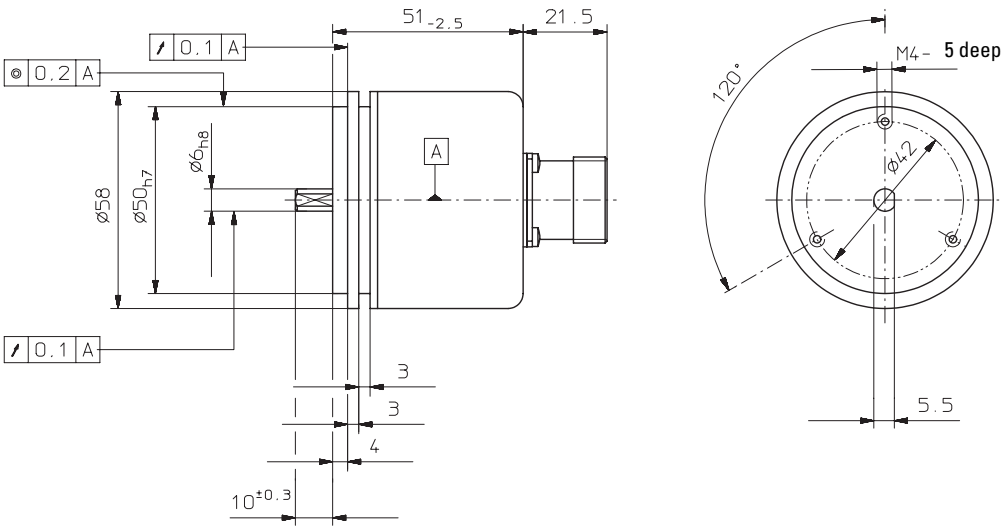

Top view of mating side, male contact base:

12 pin plug

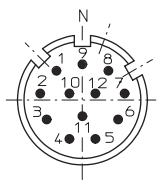

17 pin plug

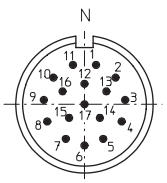

Universal Type 5850

Order code: 8.5850.XXXX.XXXX

Range

Flange
- 1 = Clamping flange
- **2 = Synchronous flange**

Shaft (ø x L)
- **1 = ø 6 mm x 10 mm**
- 2 = ø 10 mm x 20 mm

Interface and supply voltage
- 1 = SSI with 5 V supply voltage
- **2 = SSI with 10 ... 30 V supply voltage**
- 3 = Parallel with 5 V supply voltage
- 4 = Parallel with 10 ... 30 V supply voltage
- 7 = 4 ... 20 mA with 5 V supply voltage
- **8 = 4 ... 20 mA with 10 ... 30 V supply voltage**

Stock types
8.9000.1145.5000

Prefered types are ***fat*** *marked*

Options
- **2 = SET[1] and V/R**
- 3[2] = SET and Latch[1]
- 4[2] = V/R[1] and Latch

ALARM output on request

[1] at 14 bits parallel output and 17pin plug

[2] Not with SSI or current interface

Code type and division
use corresponding table

Type of connection
- 1 = Cable axial (1 m PVC-cable)
- 2 = Cable radial(1 m PVC-cable)
- 3 = axial plug without mating connector
- **5 = radial plug without mating connector**

Accessories:
Corresponding mating connector to connection type 3 and 5
- at SSI or current interface
  Art.No 8.0000.5012.0000
- at parallel interface
  Art.No 8.0000.5042.0000

Further accessories see encoder catalogue, accessories chapter

Code type and division for encoder with parallel output
(Interface and supply voltage, version 3 or 4)

Division	Order code Gray/Gray-Excess	Order code Binary	Order code BCD
250	E02	B02	D02
360	**E03**	B03	D03
500	E05	B05	D05
720	E07	B07	D07
900	E09	B09	D09
1000	E01	B01	D01
1024 (10 Bit)	**G10**	**B10**	D10
1250	E12	BA2	DA2
1440	E14	BA1	DA1
1800	E18	B18	D18
2000	E20	B20	D20
2500	E25	B25	
2880	E28	B28	
3600	E36	B36	
4000	E40	B40	
4096 (12 Bit)	G12	B12	
5000	E50	B50	
7200	E72	B72	
8192 (13 Bit)	**G13**	B13	
16384 (14 Bit)	**G14**	**B14**	

Preferred divisions are bold

Code type and division for encoder with SSI output
Interface and supply voltage, version 1 or 2

Division	Order code Gray	Order code Binary
1024 (10 Bit)	G10	B10
4096 (12 Bit)	G12	B12
8192 (13 Bit)	G13	B13
16384 (14 Bit)	G14	B14

Code type and division for encoder with analogue output
Interface and supply voltage, version 7 or 8 (4 ... 20 mA)

8192 (13 Bit)	G13