Multifunctional electronic Tachometer with 2 Limits

TA134

Order designation

Order no.	Interface
0	Without interface
1	RS485
	Limits
1	Relay outputs
2	Optocoupler outputs
	Supply voltage
1	24 / 48 VAC
2	115 / 230 VAC
3	12...30 VDC

TA134. ☐ ☐ ☐ **AX01**

Accessories

Order no.	
Z 118.033	Adapter plate for screw mounting
Z 118.034	Adapter plate for clips mounting
Z 118.035	Adapter plate for clips mounting with big front panel

Features

Model	LCD-Tachometer for rpm and speed
Connection	One-channel, digital sensor Floating impulse contacts
Functions	Two limits and scaling Batch counter with scaling factor to be programmed from 0.0001... 9999.99 Interface RS485

Mechanical data

Display	7-segment LCD-display with 2 rows of digits and display backlighting 6-digit tacho display, 7 mm high 6-digit display of limit values, 4 mm high Decimal point programmable Display suppression of preceding zeroes Measuring units programmable „1/h“ „1/min“ „1/s“
Operation, keypad	Front membrane with short-stroke keys
Front dimensions	DIN housing 48 x 48 mm
Mounting	Front-panel installation, by means of clamping frame
Weight	AC: approx. 260 g DC: approx. 140 g
Connection	Plug-in screw terminals Grid 5.08 mm / 3.81 mm
Core cross-section	Max. 1.5 mm^2
Housing material	Macrolon 6485 (PC) black, UL 94V-0
Front membrane	Polyester

Ambient conditions

Ambient temperature	0...+50 °C
Storage temperature	-20...+70 °C
Relative humidity	Max. relative humidity 80 %, at 25 °C, non condensing
Protection	Front IP 65 to DIN 40050
General rating	EN 61010 Part 1 - Protection standard II - Overvolt. protection categ. II - Contamination factor 2
Interference immunity	EN 50082-2
Emitted interference	EN 50081-1

Block diagram

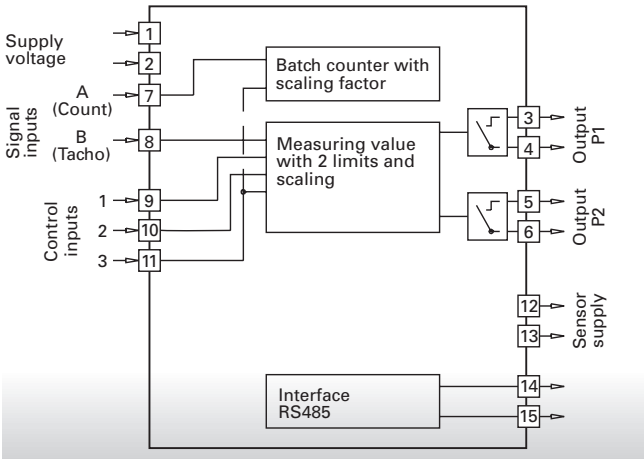

Pin assignments

with relay outputs

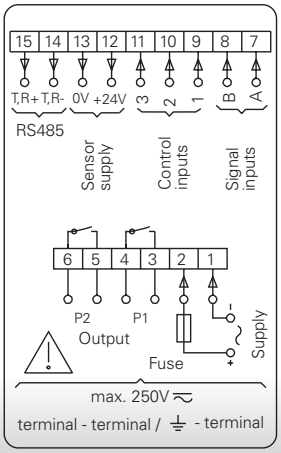

with electronic outputs

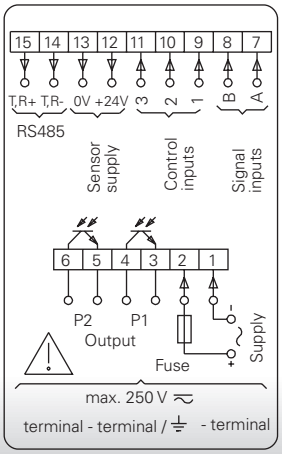

Electrical data

Supply voltage	Choice of two voltages (AC) via switch on device. 115 / 230 VAC ±10 % (50 / 60 Hz) 24 / 48 VAC ±10 % (50 / 60 Hz) 12...30 VDC 5 % residual ripple ±10 %
Power consumption	5 VA, 4 W
Sensor supply	10...26 VDC / 60 mA
Signal inputs	Comparator inputs PNP-, NPN- or AC-logic Voltage level 4 V...40 V Input resistance 3 kOhm
Tachometer rate	25 Hz, 40 kHz programmable
Counting frequency	3 Hz, 25 Hz, 10 kHz programmabel (batch counter)
Control inputs	3 control inputs to be programmable as Reset, Stop, Hold, Print, Keylock etc.
Limits	Optocoupler outputs Max. switching voltage 50 V Max. switching current 25 mA Relay signal outputs 2 floating relays to be programmed as normally closed or open Internal spark quenching Max. swit. voltage 250 VAC/110 VDC Max. switching current 1 A Max. swit. capacity 150 VA/30 W
Data back-up	> 10 years via EEPROM

4

Dimensions

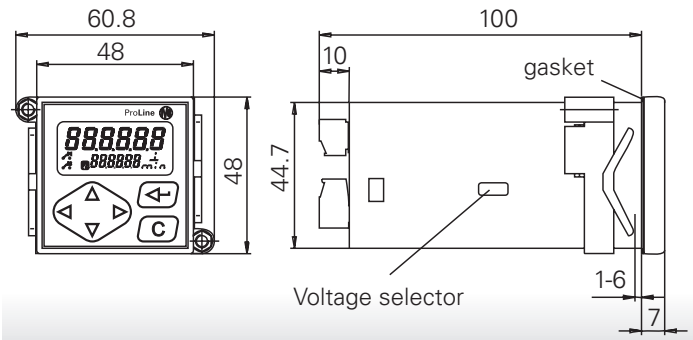
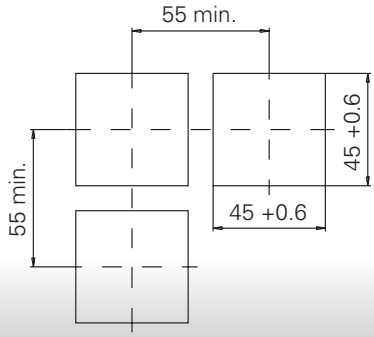
Cutout