Sine wave output Type 5804

- Sturdy model to industry standard, Ø58 mm housing
- Many variations, also customized versions
- IP 65
- Temperature and ageing compensation
- Short-circuit proof outputs
- Reverse connection protection (at U_B= 10 ... 30 V DC)
- Resolution up to 5000 ppr
- Voltage sine wave outputs (1Vpp)
- Ex available as explosion proof zone 2 and 22

Mechanical characteristics:

Speed:	max. 12000 min^{-1}
Rotor moment of inertia:	appr. 1,8 x 10^{-6} kgm^2
Starting torque:	< 0,01 Nm
Radial load capacity of shaft*:	80 N
Axial load capacity of shaft:*:	40 N
Weight:	appr. 0,4 kg
Protection acc. to EN 60 529:	IP 65
Working temperature:	–20 °C ... +85 °C[1)]
Operating temperature:	–20 °C ... +90 °C[1)]
Shaft:	stainless steel
Shock resistance acc. to DIN-IEC 68-2-27	1000 m/s^2, 6 ms
Vibration resistance acc. to DIN-IEC 68-2-6:	100 m/s^2, 10 ... 2000 Hz

*View also diagrams on page 25
[1)]Constant trailing: -20 ... +70 °C

Pulse rates available at short notice:

500, 512, 600, 625, 720, 745, 750, 762, 800, 900, 927, 1000, **1024**, 1250, 1270, 1400, 1500, 1800, 2000, **2048**, 2250, 2400, 2500, 3000, 3600, 4000, **4096**, 5000

Other pulse rates on request

Electrical characteristics:

Output circuit:	Sine wave U = 1 Vpp	Sine wave U = 1 Vpp
Supply voltage:	5 V (±5%)	10 ... 30 V DC
Current consumption (no load) with inverted signals:	typ. 65 mA / max. 110 mA	typ. 65 mA / max. 110 mA
-3 dB frequency:	≥ 180 kHz	≥ 180 kHz
Signal level channels A/B:	1 Vpp (±20%)	1 Vpp (±20%)
Signal level channel 0:	0,1 ... 1,2 V	0,1 ... 1,2 V
Short circuit proof outputs:[1)]:	yes	yes
Reverse connection protection at UB:	no	yes
Conforms to CE requirements acc. to EN 61000-6-1, EN 61000-6-4 and EN 61000-6-3		

[1)]When supply voltage correctly applied

Sine wave output Type 5804

Terminal assignment voltage sine wave output:

Signal:	0 V	0 V Sensor[2)]	$+U_B$	$+U_B$ Sensor[2)]	A	$\overline{A}$	B	$\overline{B}$	0	$\overline{0}$	Shield
12 pin plug, Pin:	10	11	12	2	5	6	8	1	3	4	PH[1)]
Cable colour:	WH 0,5 mm²	WH	BN 0,5 mm²	BN	GN	YE	GY	PK	BU	RD	

1) PH = Shield is attached to connector housing

2) The sensor cables are connected to the supply voltage internally if long feeder cables are involved they can be used to adjust or controll the voltage at the encoder

- If the sensor cables are not in use, they have to be insulated or $0\ V_{Sensor}$ has to be connected to 0 V and $U_{BSensor}$ has to be connected to U_B

Insulate unused outputs before initial startup.

Dimensions

Clamping flange ø 58

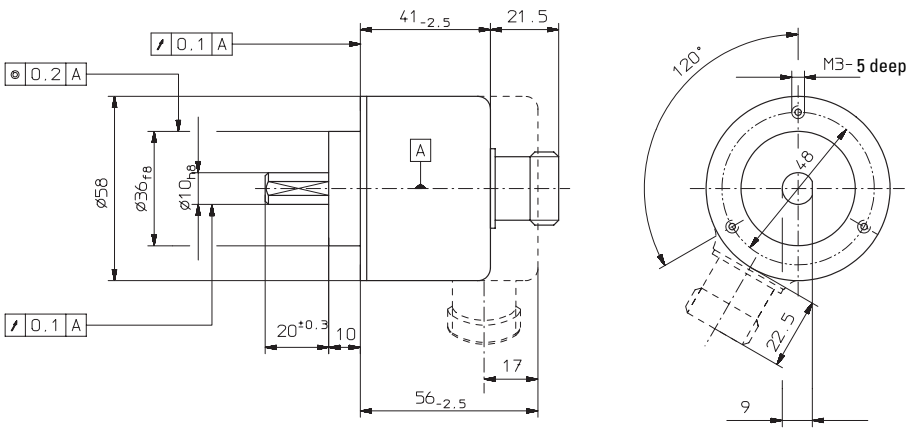

Synchronous flange ø 58

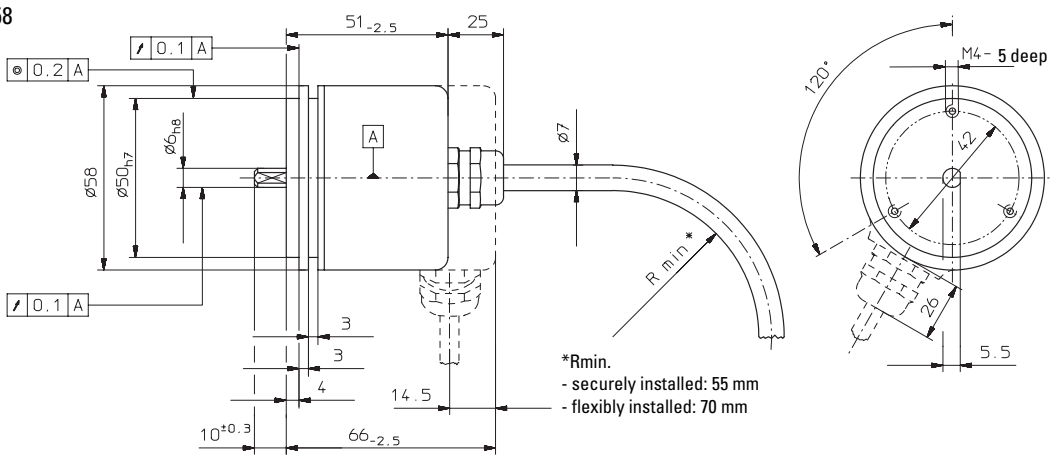

Mounting advice:

Do not connect encoder and drive rigidly to one another at shafts and flanges! Always use couplings to prevent shaft overload (see accessories chapter).

Sine wave output Type 5804

Order code: 8.5804.XXXX.XXXX

Range

Flange
- 1 = Clamping flange ø 58
- **2 = Synchronous flange ø 58**

Shaft
- **1 = ø 6 mm x 10 mm**
- 2 = ø 10 mm x 20 mm

Type of connection and supply voltage
- **1 = Sinus, 1 Vpp (with inverted signal) 5 V supply voltage**
- 2 = Sinus, 1 Vpp (with inverted signal) 10 ... 30 V Supply voltage

Pulse rate
(e.g. 250 pulses=> 0250)

Type of connection
- 1 = Cable axial (1 m TPE-Cable)
- 2 = Cable radial (1 m TPE-Cable)
- 3 = axial 12 pin plug without mating connector
- **5 = radial 12 pin plug without mating connector**

Prefered types are ***fat*** *marked*

Accessories

Corresponding mating connector to
Type of connection 3 or 5,
12 pin: Art.-No.. 8.0000.5012.0000
pin assignment cw

Corresponding mating connector with cable pre-assembled: Art.- No. 8.0000.6101.XXXX
(XXXX = length [m])
Set includes
Connector typ 8.0000.5012.0000 and
cable typ 8.0000.6100.XXXX
(Cable PUR 10 x 0,14 mm^2 + 2 x 0,5 mm^2)

PIN alllocation:

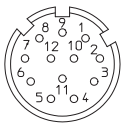

Dimensions:

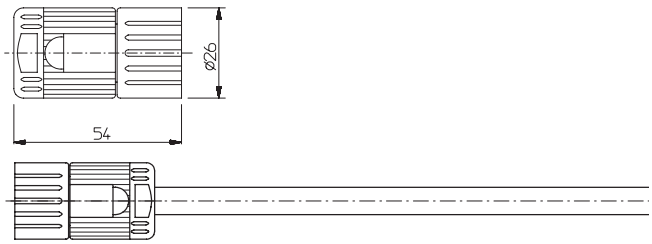

Fastening eccentrics for shaft encoders with synchronous flange

Use at least three fastening eccentrics to mount the encoder.

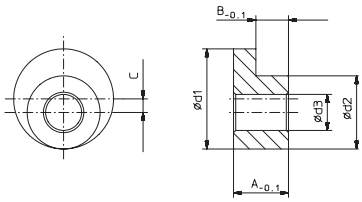

Example

Dimensions table

d_1	d_2	d_3	A	B	C	for encoder type	Ord.-No.
8,9	6,5	3,2	5,6	2,9	1,2	8.58XX.2XXX.XXXX	8.0010.4100.0000
Scope of delivery: Set with 3 screws and 3 eccentrics							