Sine wave output Type 5824

- Only 42 mm clearance needed
- Very easy mounting. The encoder is mounted directly on the drive shaft without couplings. This saves up to 30 % cost and 60 % clearance compared to shaft versions
- Many variations
- Temperature and ageing compensation
- Short-circuit proof outputs
- Reverse connection protection for voltage supply
- Ssine wave output 1 Vpp
- Resolution up to 5000 ppr
- IP 66
- available as explosion proof zone 2 and 22

Mechanical characteristics:

Speed without sealing:	max. 12000 min^{-1}
Speed with sealing:[1]:	max. 6000 min^{-1}
Rotor moment of inertia:	appr. 6 x 10^{-6} kgm^2
Starting torque without sealing:	< 0,01 Nm
Starting torque with sealing:	< 0,05 Nm
Weight:	appr. 0,4 kg
Protection acc. to EN 60 529 without sealing:	IP 40
Protection acc. to EN 60 529 with sealing:	IP 66
Working temperature without sealing:	-20 °C ... +85 °C[2][3]
Working temperature with sealing:	-20 °C ... +80 °C[2][3]
Operating temperature without sealing:	-20 °C ... +90 °C [2][4]
Operating temperature with sealing:	-20 °C ... +85 °C [2][4]
Shaft:	stainless steel
Shock resistance acc. to DIN-IEC 68-2-27	2000 m/s^2, 6 ms
Vibration resistance acc. to DIN-IEC 68-2-6:	100 m/s^2, 10...2000Hz

[1] for continuous operation max. 3000 min^{-1} ventilated
[2] non-condensing
[3] 70 °C with Cable
[4] 80 °C with Cable

Pulse rates available at short notice:

at voltage-sine wave version
500, 512, 600, 625, 720, 745, 750, 762, 800, 900, 927, 1000, **1024**, 1250, 1270, 1400, 1500, 1800, 2000, **2048**, 2250, 2400, 2500, 3000, 3600, 4000, **4096**, 5000

Other pulse rates on request

Electrical characteristics:

Output circuit:	Sine wave U = 1 Vpp	Sine wave U = 1 Vpp
Supply voltage:	5 V (±5%)	10 ... 30 V DC
Current consumption	type. 65 mA /	type. 65 mA /
(no load) with inverted signals:	max. 110 mA	max. 110 mA
-3 dB frequency:	≥ 180 kHz	≥ 180 kHz
Signal level channels A/B:	1 Vpp (±20 %)	1 Vpp (±20 %)
Signal level channel 0:	0,1 ... 1,2 V	0,1 ... 1,2 V
Short circuit proof outputs:[1]	yes	yes
Reverse connection protection at U_B:	no	yes
Conforms to CE requirements acc. to EN 61000-6-1, EN 61000-6-4 and EN 61000-6-3		

[1] When supply voltage correctly applied

Sine wave output Type 5824

Terminal assignment voltage sine wave output:

Signal:	0 V	0 V Sensor[2)]	$+U_B$	$+U_B$ Sensor[2)]	A	$\overline{A}$	B	$\overline{B}$	0	$\overline{0}$	Shield
12 pin plug; Pin:	10	11	12	2	5	6	8	1	3	4	PH[1)]
Colour:	WH 0,5 mm^2	WH	BN 0,5 mm^2	BN	GN	YE	GY	PK	BU	RD	

1)PH = Shield is attached to connector housing
2)The sensor cables are connected to the supply voltage internally if long feeder cables are involved they can be used to adjust or controll the voltage at the encoder

- If the sensor cables are not in use, they have to be insulated or 0 V_{Sensor} has to be connected to 0 V and $U_{BSensor}$ has to be connected to U_B

Insulate unused outputs before initial startup.

Dimensions

Flange Type 1

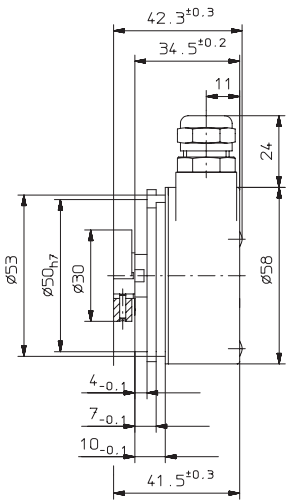

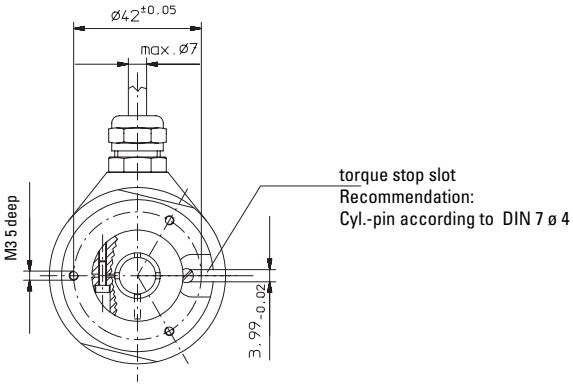

Flange Type 3 with stator coupling

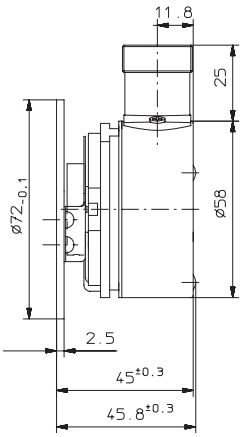

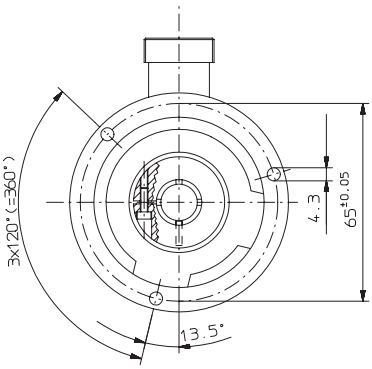

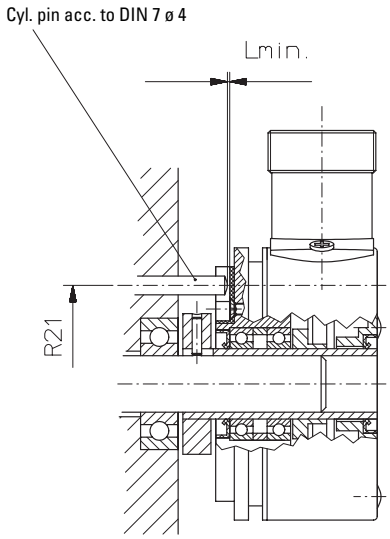

Mounting advice:

1) Do not connect encoder and drive rigidly to one another at shafts and flanges!

2) To mount a hollow shaft encoder, we recommend to use a torque stop pin that fits into the torque stop slot or a stator coupling.

3) When mounting the encoder ensure that Lmin. is larger than the axial play of the drive.

Sine wave output Type 5824

Order code: 8.5824.XXXX.XXXX

Range

Flange
- 1 = Flange for through shaft
- 2 = Flange for blind hole shaft*
- **3 = Flange for through shaft and stator coupling**
- 4 = Flange for blind hole shaft* and stator coupling

*length of drive shaft ≤ 30 mm

Shaft
- 1 = ø 6 mm without sealing
- **2 = ø 6 mm with sealing**
- 3 = ø 8 mm without sealing
- 4 = ø 8 mm with sealing
- 5 = ø 10 mm without sealing
- **6 = ø 10 mm with sealing**
- 7 = ø 12 mm without sealing
- **8 = ø 12 mm with sealing**
- N = ø 14 mm with sealing
- P = ø 15 mm with sealing

Pulse rate
(e.g. 250 pulses=> 0250)

Type of connection
- 1 = Cable radial (1 m TPE-cable)
- **2 = radial 12 pin plug**

Output circuit and supply voltage
- 1 = Sinus, 1 Vpp (with inverted signal) 5 V supply voltage
- 2 = Sinus, 1 Vpp (with inverted signal) 10 ... 30 V supply voltage

Accessories

Corresponding mating connector to
Type of connection 3 or 5,
12 pin: Art.-No.. 8.0000.5012.0000
pin assignment ccw
Corresponding mating connector with cable pre-assembled: Art.- No. 8.0000.6101.XXXX
(XXXX = length [m])
Set includes Connector typ 8.0000.5012.0000 and cable typ 8.0000.6100.XXXX
(Cable PUR 10 x 0,14 mm^2 + 2 x 0,5 mm^2)

PIN alllocation:

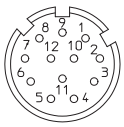

Dimensions:

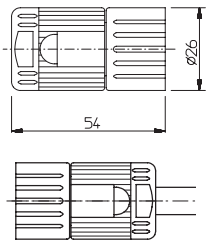

Mounting kit for hollow shaft encoder ø 58 mm:

Various mounting variations can be supplied
Delivery includes:
- 1 x cylindric pin with thread
  Ord.-No. 8.0010.4700.0000
- 1 x mounting bracket
  Art.-no. T.035.009
- Screw M3x5
  Ord.-No. N.630.305
- 1 x long torque support slot
  Ord.-No. T.051.672

Complete set:
Ord.-No. 8.0010.4600.0000

Stator coupling two wings

– for high dynamic application
Includes:
- 1x coupling two wings
- 2x 2 screws

Complete as set:
Order-No.: 8.0010.4D00.0000
(see page 235)

Tether arm short

Order-No.: 8.0010.4R00.0000
(see page 238)