Large diameter Type 0320

- Sturdy incremental hollow shaft encoder
- Assembled directly to drive shaft without couplings
- Hollow shaft diameter 12 ... 25,4 mm (1")
- This encoder combines the advantage of low profile and high mechanical requirements

Mechanical characteristics:

Speed:	max. 6000 min^{-1}
Rotor moment of inertia:	appr. 1,8 x 10^{-6} kgm^2
Starting torque:	< 0,15 Nm
Weight:	appr. 0,6 kg
Protection acc. to EN 60 529:	IP 65
Working temperature:	-20° C ... +60 °C
Operating temperature:	-20° C ... +70 °C
Shaft:	stainless steel
Shock resistance acc. to DIN-IEC 68-2-27	1000 m/s^2, 6 ms
Vibration resistance acc. to DIN-IEC 68-2-6:	100 m/s2, 10...2000 Hz

Pulse rates available at short notice:

up to 3600

Higher pulse rates on request

Electrical characteristics:

Output circuit:	RS 422 (TTL-compatible)	Push-pull
Supply voltage:	5 V (±5 %)	11 ... 24 V DC (+20 %)
Power consumption (no load) without inverted signal:	-	typ. 55 mA / max. 80 mA
Power consumption (no load) with inverted signals:	typ. 70 mA / max. 100 mA	typ. 80 mA/ max.150 mA
Permissible load/channel:	max. ±50 mA	max. ±30 mA
Pulse frequency:	max. 50 kHz	max. 50 kHz
Signal level high:	min. 2,5 V	min. U_B–3 V
Signal level low:	max. 0,5 V	max. 2,5 V
Rise time tr	max. 200 ns	max. 1 µs
Fall time tf	max. 200 ns	max. 1 µs
Short circuit proof outputs:[1)]	yes[2)]	yes
Reverse connection protection at U_B:	no	yes
Conforms to CE requirements acc. to EN 61000-6-1, EN 61000-6-4 and EN 61000-6-3		

[1)] When supply voltage correctly applied
[2)] Only one channel at a time: (when U_B = 5 V, short-circuit to channel, 0 V, or +U_B is permitted.)
(when U_B = 10 ... 30 V short-circuit to channel or 0 V is permitted.)

Large diameter Type 0320

Terminal assignment

Signal	0 V	$+U_B$	A	$\overline{A}$	B	$\overline{B}$	0	$\overline{0}$	Shield
12 pin plug; Pin:	1	2	3	5	4	6	7	8	PH[1)]
Colour:	BK 0,5 mm²	BU GY PK	BN 0,5 mm²	YE RD BU	BG	GN	PK	VI	

[1)]PH = Shield is attached to connector housing
- Using RS 422 outputs and long cable distances, a wave impedance has to be applied at each cable end.

Insulate unused outputs before initial startup.

Dimensions

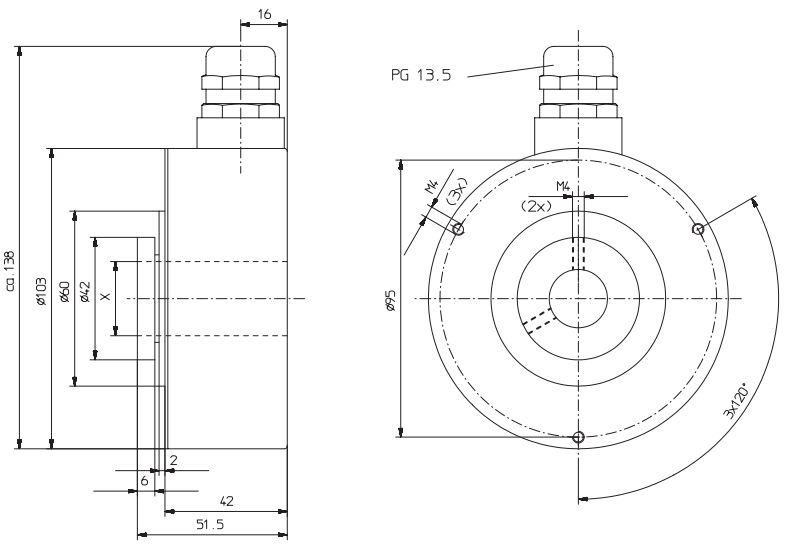

Mounting advice:

Do not connect encoder and drive rigidly to one another at shafts and flanges!

Top view of mating side, male contact base:

12 pin plug

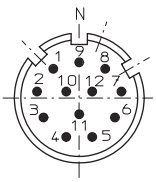

Order code:

05.0320.XXXX.XXXX

Description of order code:

Range

Hollow shaft diameter

12 =	12 mm
14 =	14 mm
15 =	15 mm
16 =	16 mm
18 =	18 mm
20 =	20 mm
22 =	22 mm
24 =	24 mm
25 =	25 mm
75 =	25,4 mm (1”)

Pulse rate
(e.g. 360 pulses=> 0360)

Type of connection

1 =	Cable radial (1 m PVC-cable)
2 =	radial 12 pin plug without mating connector

Output circuit and supply voltage

1 =	RS 422 (with inverted signal) 5 V supply voltage
2 =	Push-pull (without inverted signal) 11 ... 24 V supply voltage
3 =	Push-pull (with inverted signal) 11 ... 24 V supply voltage
4 =	RS 422 (with inverted signal) 11 ... 24 V supply voltage