Compact Type 3620

- Low price, compact, high performance
- With hollow shaft for easy mounting
- Fits directly onto drive shaft - no couplings needed - saves up to 30% on cost and 60% on installation space and time
- Universal application in mechanical engineering, vehicles, conveyors and elevators as well as for servo and geared motors
- Wide temperature range (-30 … +90 °C)
- Hollow shaft up to 8 mm diameter
- Low current consumption despite high scanning rate
- IP 65 from housing side
- Temperature compensation
- Sturdy cable entry thanks to multiple clamping
- Highly flexible cable (withstands constant flexing at 0 °C … 70 °C)
- Reverse connection protected and short circuit proof
- Broad input voltage range (5 … 18 V or 8 … 30 V)

Mechanical characteristics:

Speed:*	max. 12000 min^{-1}
Rotor moment of inertia:	ca. 0,2 x 10^{-6} kgm^2
Starting torque:	< 0,05Nm
Weight:	ca. 0,08 kg
Protection acc. to EN 60 529:	IP 65 housing side
Operating temperature:	–40° C ... +85 °C
Working temperature:	–30 °C bis +90 °C
Material	Shaft: brass; Housing: MS Cable: PVC
Shock resistance acc. to DIN-IEC 68-2-27:	1000 m/s^2, 6 ms
Vibration resistance acc. to IEC 68-2-6:	500 m/s^2, 10...2000 Hz

Electrical characteristics:

Output circuit:	Push-pull	Push-pull
Supply voltage:	5 ... 18 V DC	8 ... 30 V DC
Power consumption (no load) with inverted signal:	< 40 mA	< 40 mA
Permissible load/channel:	max. ±50 mA	max. ±50 mA
Pulse frequency:	max. 200 kHz	max. 200 kHz
Signal level high:	min. UB - 2,5 V	min. UB - 3 V
Signal level low:	max. 0,5 V	max. 2,5 V
Rise time tr	max. 1 µs	max. 1 µs
Fall time tf	max. 1 µs	max. 1 µs
Short circuit proof outputs1):	yes1)	yes1)
Reverse connection protection at UB:	yes	yes
Conforms to CE requirements acc. to EN 61000-6-1, EN 61000-6-4 and EN 61000-6-3		

1)When supply voltage correctly applied

Pulse rates available at short notice:
25, 100, 200, 360, 500, 600, 1000, 1024, 1500, 2000, 2048, 2500, 3600

Other pulse rates on request

Hollow shaft version, Typ 3620

Terminal assignment:

Signal:	0 V	$+U_B$	A	$\overline{A}$	B	$\overline{B}$	0	$\overline{0}$	Shield
Colour:	WH	BN	GN	YE	GY	PK	BU	RD	

Insulate unused outputs before initial startup.

Dimensions

Flang with torque stop short (1)

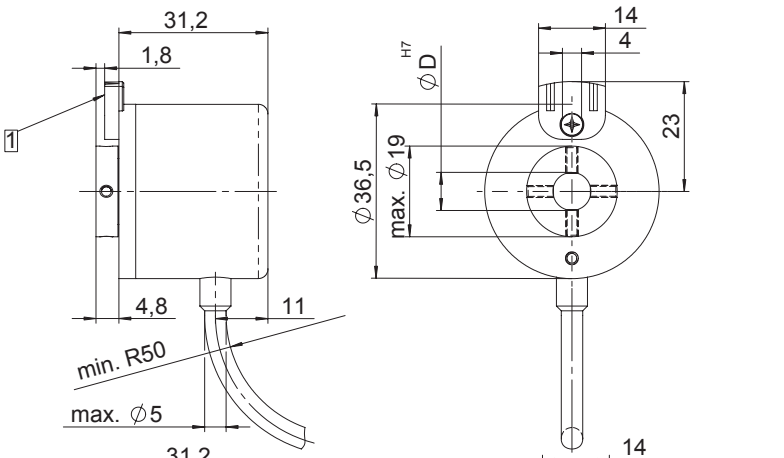

Flange with torque stop long (2)

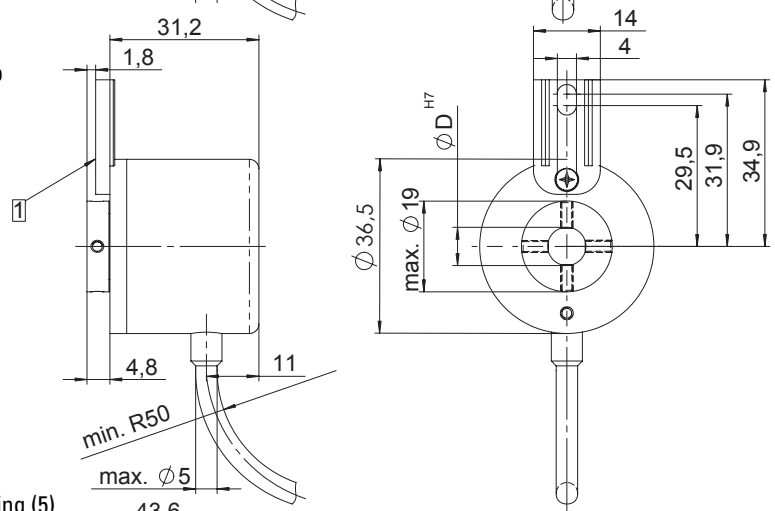

Flang with stator coupling (5)

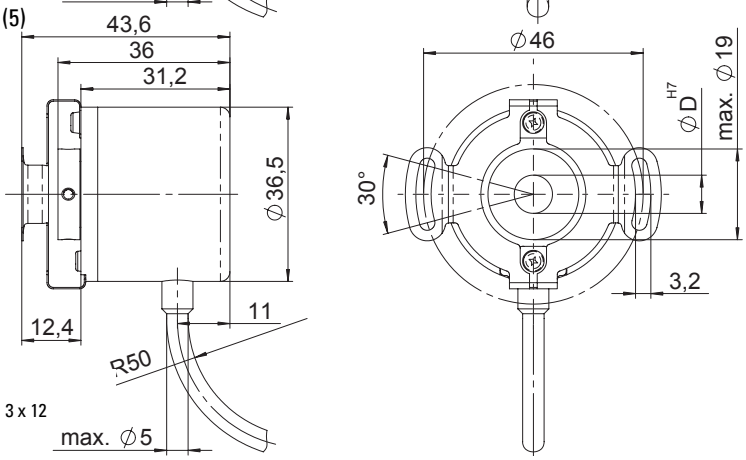

1 Slot for torque stop, reccommendation: Pin DIN 7 3 x 12

Hollow shaft version, Typ 3620

Mounting advice

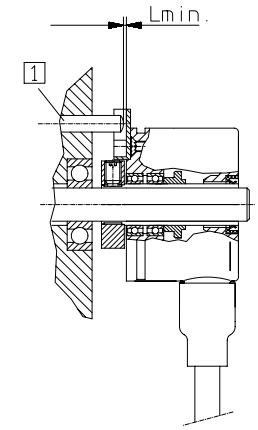

1 Pin to DIN 7 3 x 12

Mounting advice:

1) Do not connect encoder and drive rigidly to one another at shafts and flanges!

2) To mount a hollow shaft encoder, we recommend to use a torque stop pin that fits into the torque stop slot or a stator coupling.

3) When mounting the encoder ensure that Lmin. is larger than the axial play of the drive.

Order code

8.3620.XXXX.XXXX

Type series

Flange
- 1 = Hollow shaft with short torque stop
- 2 = Hollow shaft with long torque stop
- 5 = Hollow shaft with stator coupling

Hollow shaft
- 2 = ø 6 mm
- 3 = ø 6,35 mm
- 4 = ø 8 mm

Pulse rate
(z.B. 500 pulses => 0500)

Type of connection
- E = Cabel radial (2 m PVC cabel)

Output circuit and voltage display
- 2 = Push-pull with inverted signal Power supply 5 ... 18 V DC
- 3 = Push-pull without inverted signals 8 ... 30 V DC Power supply
- 4 = Push-pull with inverted signal Power supply 8 ... 30 V DC