GXP2W

GXP2W clamping flange

GXP2W servo flange

Features

– Resolution programmable from 1 to 8192 steps/revolution and up to 4096 revolutions as desired.
– Gray or binary code
– Code direction parameterizable to CW / CCW
– Self-diagnosis
– Electronic preset setting
– Optional: With incremental signals

Description of diagnostic and special functions

During switch-on, encoder conducts a self-test.
The following points are monitored during operation.

- Consistency test of code
- Exceeding of the permissible signal frequency
- LED failure, aging
- Receiver failure
- Code disk, glass breakage
- Power supply of electronic gear unit

Special functions

- Two "limit switch function" preselections
- Programmable speed monitoring
- Diagnosis and operating status

Programming conditions

– PC with RS232 interface and Windows operating system
– ProGeber programming software and manual
– Programming cable that connects the absolute encoder to the PC

Order separately under Accessories if necessary.

Electrical data

Operating voltage	10...30 VDC with reverse voltage protection
Current consumption	Max. 50 mA (w/o load), at 24 VDC
SSI pulse frequency	62.5 kHz to 1.5 MHz (depends on the cable lenght)
Monoflop time	16...26 µs
Pulse pause	Min. 25 µs
Code switching speed	Max. 800 kHz
Accuracy	±0.025° bei 400 kHz ±0.05° bei 800 kHz

Order designation

Order No.	Flange/Shaft
0	Clamping flange / 10 mm IP 54
A	Clamping flange / 10 mm IP 65
1	Servo flange / 6 mm IP 54
B	Servo flange / 6 mm IP 65

	Connection
B0	C housing plug, 16-pin, axial
B1	C housing plug, 16-pin, radial
11	Cable 16-wire 1 m, axial
21	Cable 16-wire 1 m, radial

GXP2W.□40□□A2

Mechanical data

Speed	
mechanical	Max. 10000 rpm
electrical	Max. 6000 rpm
Start-up torque	
without sealing (IP54)	< 0.010 Nm
with sealing (IP65)	< 0.015 Nm
Shaft loading	
axial	< 20 N
radial	< 40 N
Moment of inertia	2 x 10^{-6} kgm^2
Material	
Housing	Steel
Flange	Aluminum
Weight	Approx. 600 g

Accessories

Order No.	
Z 119.006	Eccentric mounting
Z 119.013	Adapter plate for clamping flange
Z 119.015	Mounting bell for servo flange
Z 119.017	Angular mounting for clamping flange
Z 119.025	Adapter plate for clamping flange
Z 119.033	Adapter plate, ø65 mm for clamping flange
Z 119.035	Bearing flange for servo flange
	Extension cord with connector on one end
Z 131.001	Connector without cable
Z 131.003	Connector with 2 m cable
Z 131.005	Connector with 5 m cable
Z 131.007	Connector with 10 m cable
Z 139.004	CD with ProGeber software + manual + programming cable
Z 144.002	Programming cable for 16-wire cable D-SUB and cable ends with connector sleeves
Z 150.008	CD with ProGeber software + manual
NA214	Suitable position display

Additional accessories (couplings, measuring wheels, cable pulls or protective housings) from page 164.

Ambient conditions

Operating temperature	-20...+70 °C
Protection type	
Shaft w/o sealing	IP 54
Shaft with sealing	IP 65
Humidity	Max. relative humidity 95 %, non-condensing
Resistance	
Vibration	DIN EN 60068-2-6 ≤100 m/s^2, 16-2000 Hz
Shock	DIN EN 60068-2-27 ≤2000 m/s^2, 6 ms
Interference resistance	DIN EN 61000-6-2
Emitted interference	DIN EN 61000-6-4

GXP2W

Contact description

1 Data +	Positive, serial data output of the differential line driver. A High level at the output corresponds to logical 1 in positive logic.
2 Data -	Negative, serial data output of the differential line driver. A High level at the output corresponds to logical 0 in positive logic.
4 TxD	Encoder transmission output for the RS232 programming interface.
5 RxD	Encoder receiving input for the RS232 programming interface.
6 Pulse +	Positive SSI pulse input. Pulse + forms a current loop with pulse -. A current of approx. 7 mA in direction of Pulse + input generates a logical 1 in positive logic.
7 Pulse -	Negative SSI pulse input. Pulse - forms a current loop with pulse +. A current of approx. 7 mA in direction of Pulse - input generates a logical 0 in positive logic.
8, 10, 11 Output 1, 3, 4	The special outputs 1, 3 and 4 may be optionally assigned the special functions preselection 1, preselection 2, speed monitoring or diagnosis status by programming.
9 Preset-OUT	Special output for preset monitoring. Cannot be freely programmed.
12 GND	Encoder ground connection. The voltage drawn to GND is UB.
13 Preset-IN	Preset input for setting a preset at any desired point within the entire resolution. The presetting process is triggered by a High pulse (pulse duration ≥100 ms). For maximum interference immunity, the input must be connected to GND.
14 UP/$\overline{\text{DOWN}}$	UP/DOWN counting direction input. When not connected, this input is on High. UP/$\overline{\text{DOWN}}$-High means increasing output data with a clockwise shaft rotating direction when looking at the flange. UP/$\overline{\text{DOWN}}$-Low means increasing values with a counter-clockwise shaft rotating direction when looking at the flange. The rotating direction can also be changed by programming.
15 UB	Encoder power supply connection.
16 GND-PRG	Reference potential for programming interface. Internally not directly connected to GND.

Connection assignment

Plug	Cable Color	Assignment
Pin 1	violet	Data +
Pin 2	brown/white	Data -
Pin 3	green/white	–
Pin 4	yellow/white	TxD
Pin 5	gray/white	RxD
Pin 6	white/pink	Pulse +
Pin 7	blue/white	Pulse -
Pin 8	red/white	Output 1
Pin 9	black/white	Preset-OUT: Output 2
Pin 10	brown/green	Output 3
Pin 11	green/gray	Output 4
Pin 12	blue	GND
Pin 13	yellow	Preset-IN
Pin 14	brown	UP/$\overline{\text{DOWN}}$
Pin 15	red	UB
Pin 16	pink	GND-PRG

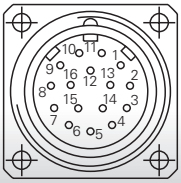

Please use leads twisted in pairs for extension cables.

Inputs

Control signals	UP/$\overline{\text{DOWN}}$ and Preset-In
Level High	> 0.7 UB
Level Low	< 0.3 UB
Connection:	UP/$\overline{\text{DOWN}}$ input with 10 kohms against UB. Preset input with 10 kohms against GND.
SSI	optocoupler input for electrical isolation

Outputs

SSI	RS485	
Special outputs		
Level High	≥ UB -3.5 V	(with I = -20 mA)
Level Low	≤ 0.5 V	(with I = 20 mA)
Loading High	≤ -20 mA	
Loading Low	≤ 20 mA	

All special outputs with short-circuit-proof push-pull output stages.

Dimensions

GXP2W clamping flange

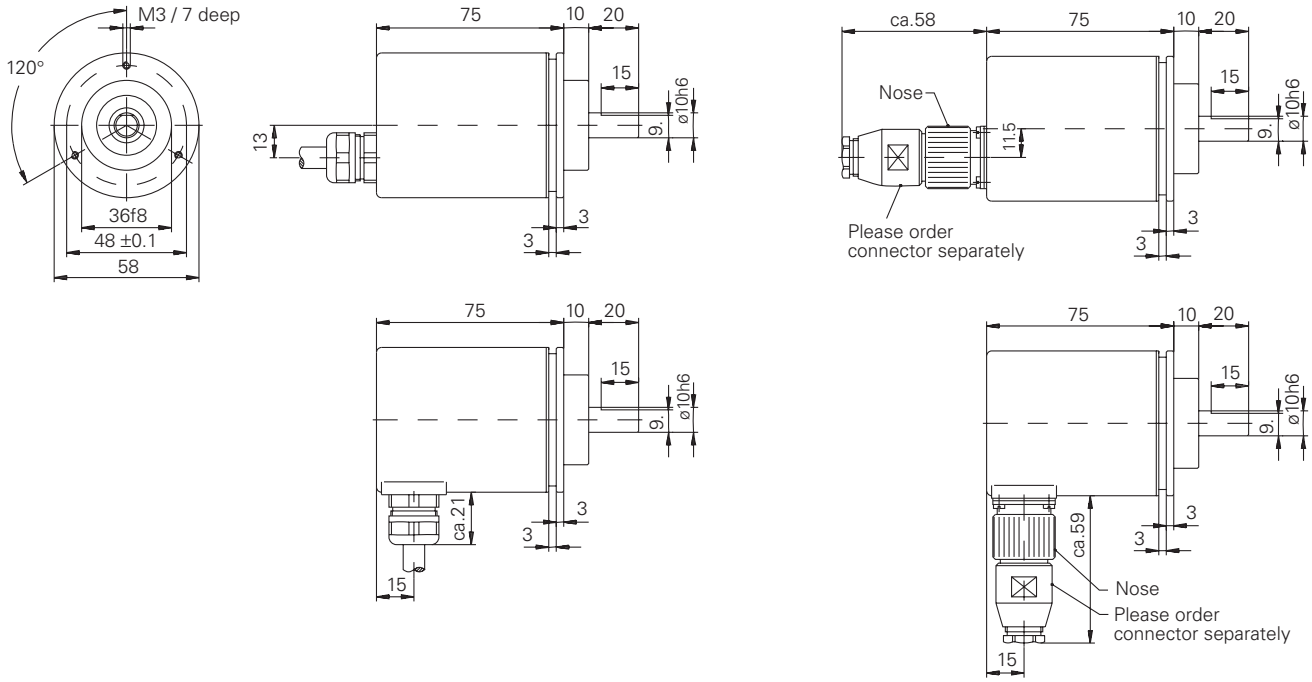
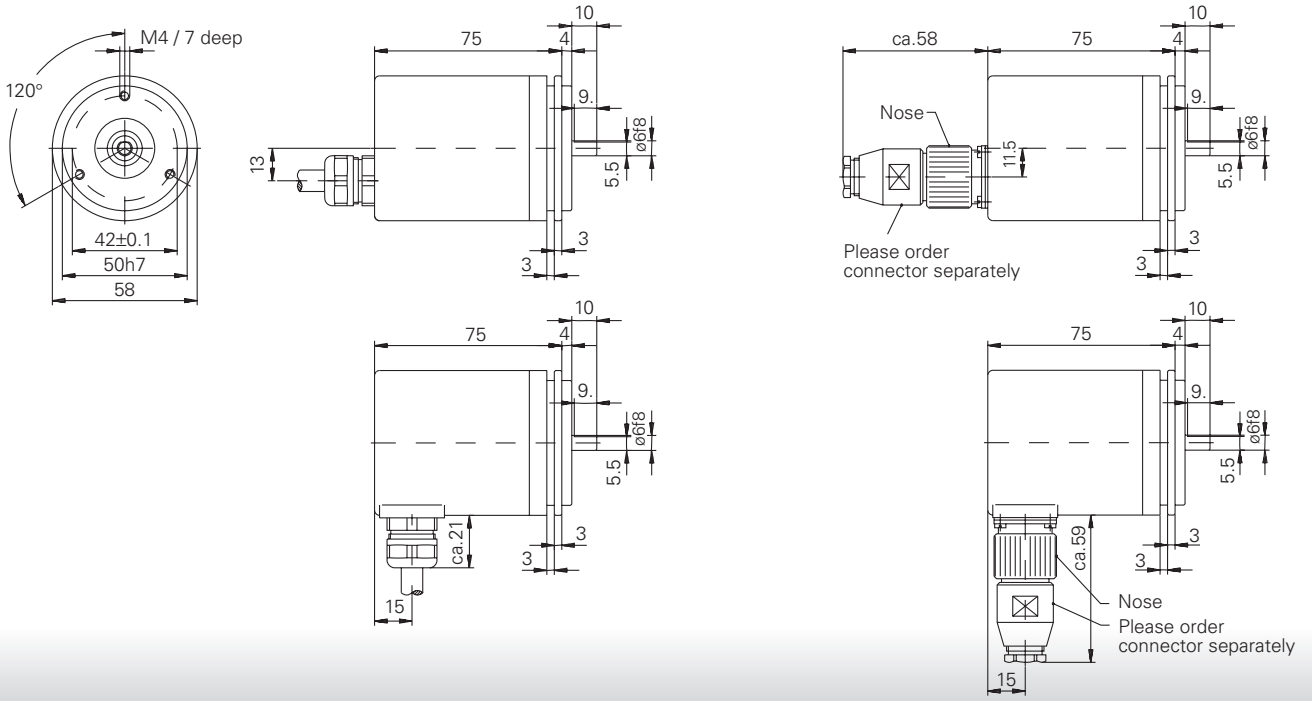
GXP2W servo flange