FlexTemp 2301 Temperature Transmitter

4...20 mA transmitter for Pt100 sensors

2-, 3- or 4-wire sensors

Accuracy better than 0.25°C

Sensor offset correction

Automatic/configurable cable resistance compensation (2-wire)

Sensor error detection

2-way configuration (Windows)

Configurable damping and status indication

Engineering unit °C or °F

PC datalogging

Description

FlexTemp 2301 is a 4...20 mA loop-powered transmitter for Pt100 sensors.

Either 2-, 3- or 4-wire sensors can be used. For 2-wire sensors an automatic balancing of the sensor cable resistance is possible with shorted sensor cable. The cable resistance can be manually configured as well.

Using a PC, the Windows-based Flex-software and a FlexProgrammer configuring unit, the following parameters can be configured via the output connectors: TAG no., number of wires, cable resistance, error detection level, measuring range/unit, damping, offset and status indication.

The Flex-software has a datalogging facility enabling the user to monitor measuring results or calibrate the measuring setup.

BOURDON HAENNI
made to measure

Technical Data

Input

Accuracy	
Span ≤ 250°C:	< 0.25°C {2}
Span > 250°C:	0.25% of span
Sample time	< 0.7 sec.
Pt100 Standard	IEC/DIN/EN 60 751-2
RTD measuring current	0.3 mA, continuously
Sensor type	2-, 3- or 4-wires {1}
Sensor short detection	< -225°C
Sensor break detection	> 875°C
Error detection delay	< 10 sec.
Compensation for cable error	< 0.02°C/Ohm (3-wire)
Cable resistance	Max. 20 Ohm /wire {1}
Measuring range	-200...850°C {1}
Measuring unit	°C or °F {1}
Minimum span	25°C
Protection	+/- 35 V_{dc}
Suppression	50 and 60 Hz
Resolution	14 bit
Repeatability	< 0.1°C
Ripple immunity	IEC 770 6.2.4.2
Offset Adjustment	Max. ± 10°C {1}

Output

Signal span	4...20 mA, 2-wire
Accuracy	< 0.1% of signal span
Supply range	8...35 V_{dc}
Ripple immunity	3 V_{rms}
Load equation	$R_L \leq (V_{cc} - 8)/23$ [kOhm]
Up/Down scaling limits	23 mA/3.5 mA {1}
Damping	0...30 sec. {1}
Protection	Reversed polarity protection
Resolution	12 bit
Effect of variations in supply voltage:	
Output current	0.01% per volt
TAG No.	15 characters {1}

Environmental conditions

Operating temperature	-40...85°C
Storage temperature	-55...90°C
Humidity	< 90% RH (IEC 68-2-38)
Vibrations	GL, test 2 (IEC 68-2-6)
Long-term test	IEC 770 6.3.2

EMC data

Generic standards	EN 61000-6-3, EN61000-6-2
Product standards	EN 61326
Namur	NE21

Mechanical data

Dimensions	62 x 88 x 24 mm
Protection class	Housing: IP 30; Terminals: IP10

Other data

Temperature drift	Typ. 0.003% per °C Max. 0.01% per °C
Power-on time	10 sec.
Failure information	Namur NE43

Test conditions

Configuration	0...100°C
Amb. temperature	23°C +/- 2°C
Power supply	24 V_{dc}

Disposal of product and packing

According to national laws or by returning to Bourdon-Haenni

Notes

{1}	Configurable
{2}	Lower range limit ≤ 100°C

Ordering details - FlexTemp 2301

		2301 000x (x)
Type	**8´ Digit**	
Not configured, standard safety		1
Configuration	**9´ Digit**	
Configuration according to customer specifications (default is 0...120°C, 3-wire)		C

Application Example

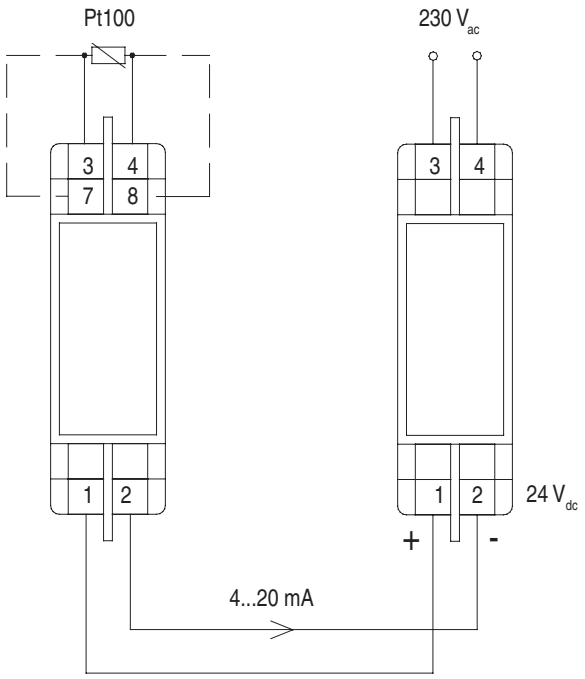

FlexTemp 2301 Power supply

Configuration

Note:
Disconnect loop supply before connecting the FlexProgrammer to FlexTemp 2301.

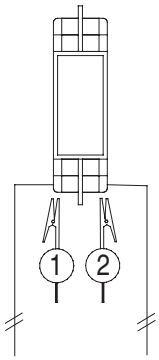

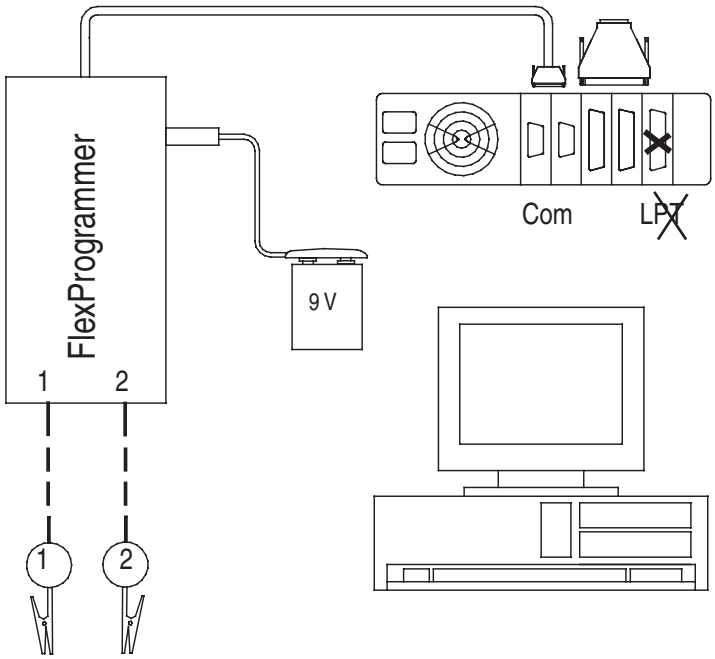

Electrical Installation

RTD

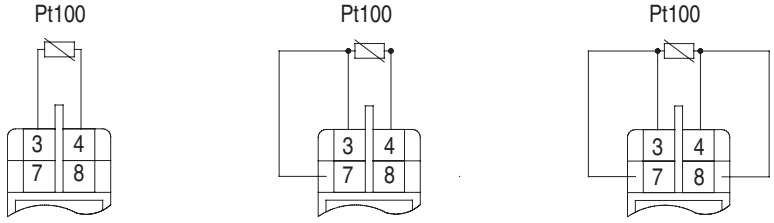

2-wire sensor | 3-wire sensor | 4-wire sensor

Accessories

FlexProgrammer configuration set,
type number 82 23-903 comprises:
FlexProgrammer with 9 pole RS232C cable
Software CD
Battery plug
Cable with test plugs

Dimensional drawings

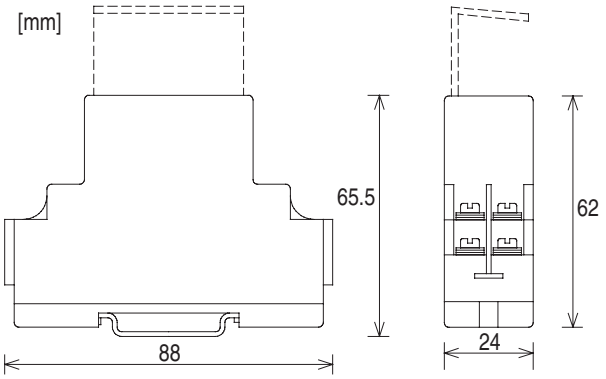

UK/2006-01-22 This data sheet may only be reproduced in full.