Ex-proof Type 7030 with ATEX

- **Our ATEX encoders now also carry approval for Dust**
- **'Flameproof-enclosure' type of construction with approval for Zone 1 and 21**
- **ExII2GEExdIICT6 and ExII2DIP6xT85°C**
- **Through hollow shaft or shaft ø 12 mm**

One type for every situation:

– **Zone 1, 2 and 21, 22**:
ExII2GEExdIICT6 and
ExII2DIP6xT85°C

Compact:

– Installation depth of only 94 mm
– **Through hollow shaft**
for minimal installation depth

Safe:

– Short-circuit proof outputs
– Reverse connection protection on inputs
– Over-voltage protection

Mechanical characteristics:

Speed:	max. 6000 min^{-1}
Rotor moment of inertia:	approx. 15 x 10^{-6} kgm^2
Starting torque:	< 0,05 Nm
Radial load capacity of shaft:	20 N (shaft version)
Axial load capacity of shaft::	10 N (shaft version)
Weight:	approx. 1,2 kg
Protection acc. to EN 60 529:	IP 64
Working temperature:	-20° C ... +60 °C
Shaft:	stainless steel
Shock resistance acc. to DIN-IEC 68-2-27	1000 m/s^2, 6 ms
Vibration resistance acc. to DIN-IEC 68-2-6:	100 m/s^2, 10 ... 2000 Hz

Pulse rates available at short notice:
10, 20, 25, 30, 50, 60, 100, 120, 125, 127, 150, 180, 200, 216, 240, 250, 254, 256, 300, 314, 360, 375, 400, 500, 512, 600, 625, 720, 745, 750, 762, 800, 900, 927, 1000, 1024, 1250, 1270, 1400, 1500, 1800, 2000, 2048, 2250, 2400, 2500, 3000, 3600, 4000, 4096, 5000

Other pulse rates on request

New: ATEX-Dust approved

Electrical characteristics:

Output circuit:	RS 422 (TTL-compatible)	Push-pull
Supply voltage: 10 ... 30 V DC	5 V (±5 %) or 10 ... 30 V DC	
Power consumption (no load) without inverted signal:	-	typ. 55 mA / max. 125 mA
Power consumption (no load) with inverted signals:	typ. 70 mA / max. 90 mA	typ. 80 mA/ max.150 mA
Permissible load/channel:	max. ±20 mA	max. ±30 mA
Pulse frequency:	max. 300 kHz	max. 300 kHz
Signal level high:	min. 2,5 V	min. U_B –2,5 V
Signal level low:	max. 0,5 V	max. 2,0 V
Rise time tr	max. 200 ns	max. 1 µs
Fall time tf	max. 200 ns	max. 1 µs
Short circuit proof outputs:[1)]	yes[2)]	yes
Reverse connection protection at UB:	no	yes
Conforms to CE requirements acc. to EN 61000-6-1, EN 61000-6-4 and EN 61000-6-3		

[1)] When supply voltage correctly applied
[2)] Only one channel at a time: (when U_B = 5 V, short-circuit to channel, 0 V, or +U_B is permitted.)
(when U_B = 10 ... 30 V short-circuit to channel or 0 V is permitted.)

Please note!
– All standards for installation of electrical systems in hazardous environment have to be observed.
– Manipulations (opening, mechanical treatment etc.) cause the loss of the EX–license, warranty claims will not be accepted and the installer will be responsible for any consequential damages.

Ex-proof Type 7030 with ATEX

Terminal assignment

Signal:	0V	0V Sensor[2)]	$+U_B$	$+U_B$ Sensor[2)]	A	$\overline{A}$	B	$\overline{B}$	0	$\overline{0}$	Shield
Colour:	WH	GY PK	BN	RD BU	GN	YE	GY	PK	BU	RD	PH[1)]

1) PH = Shield is attached to connector housing

2) The sensor cables are connected to the supply voltage internally if long feeder cables are involved they can be used to adjust or control the voltage at the encoder

- If the sensor cables are not in use, they have to be insulated or 0 V_{Sensor} has to be connected to 0 V and $U_{BSensor}$ has to be connected to U_B

- Using RS 422 outputs and long cable distances, a wave impedance has to be applied at each cable end.

Insulate unused outputs before initial startup.

Dimensions:

8.7030.14xx

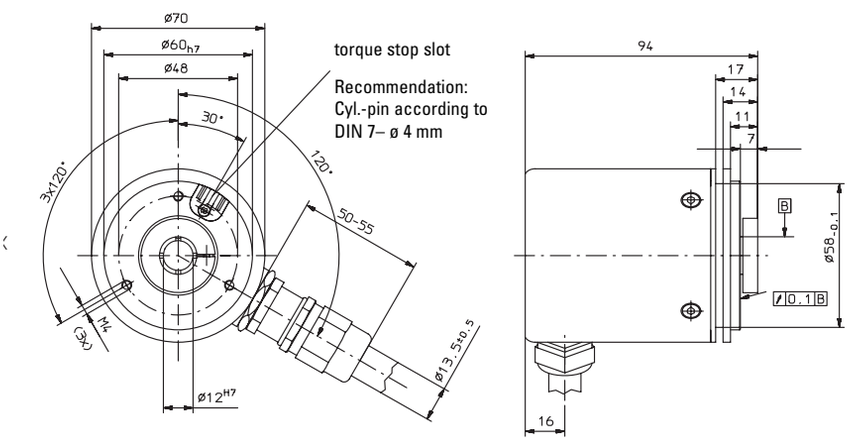

8.7030.25xx

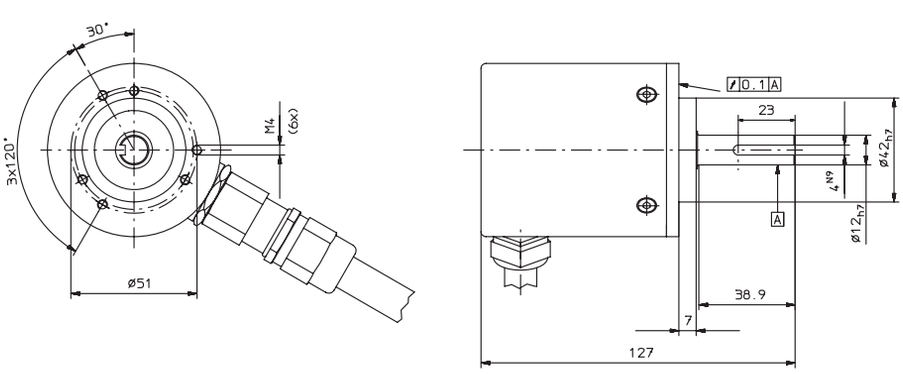

Ex-proof Type 7030 with ATEX

8.7030.26xx

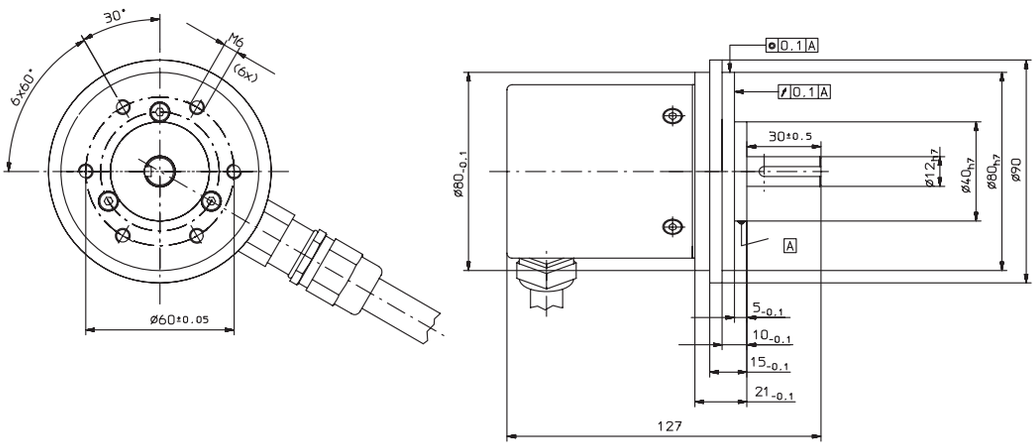

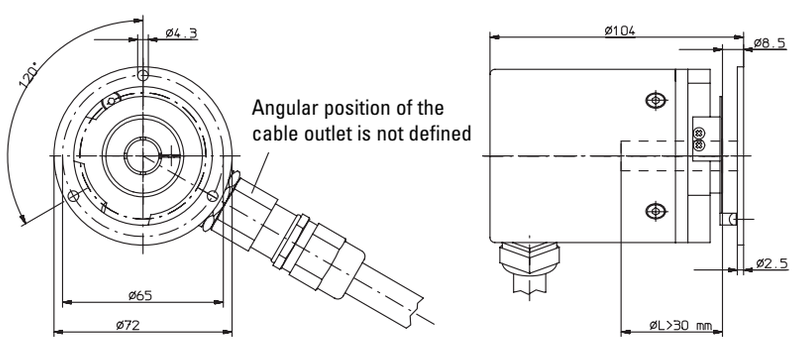

Order code:

8.7030.XXXX.XXXX

Range

Flange and hollow shaft or shaft
- 14 = Synchronous flange with hollow shaft ø 12 mm
- **25 = Clamping flange with shaft ø 12 mm**
- 26 = Clamping flange with shaft ø 12 mm and mounted flange adapter
- **27 = hollow Shaft ø 12 mm with stator coupling**

Pulse rate
(e.g. 250 pulses=> 0250)

Type of connection
- **2 = Cable radial (2 m PVC-cable) other cable lengths on request**

Output circuit and voltage supply
- **1 = RS 422 (with inverted signal) 5 V supply voltage**
- 2 = Push-pull (without inverted signal) 10 ... 30 V supply voltage
- **3 = Push-pull (with inverted signal) 10 ... 30 V supply voltage**
- 4 = RS 422 (with inverted signal) 10 ... 30 V supply voltage

Preferred types are marked in ***bold***

Accessories:

See accessories chapter