Miniature Type 2400

- High performance at a competitive price
- IP 64
- Wide temperature range (-20 ... +85 °C)
- Chromated housing is resistant to cooling lubricants and other environmental influences
- Sturdy cable outlet with multiple clamping
- Temperature compensation
- Broad input voltage range (5 ... 24 V or 8 ... 30 V)
- Highly flexible cable withstands constant flexing from 0 °C ... 70 °C)
- Low power consumption despite high scanning rate
- Reverse connection protected and Short-circuit proof
- **Kübler encoder type 24xx meet German Railways standard EN 50121****

Mechanical characteristics:

Speed:	max. 12 000min^{-1}
Rotor moment of inertia:	appr. 0,1 x 10^{-6} kgm^2
Starting torque:	<0,001 Nm
Radial load capacity of shaft:	10 N
Axial load capacity of shaft:.	20 N
Weight:	appr. 0,06 kg
Protection acc. to EN 60529:	IP 64
Working temperature:	–20° C ... +85 °C
Operating temperature:	–20° C ... +90 °C
Shaft	stainless steel
Shock resistance acc. to DIN-IEC 68-2-27	1000 m/s^2, 6 ms
Vibration resistance acc. to DIN-IEC 68-2-6:	100 m/s^2, 55 ... 2000 Hz

Electrical characteristics:

Output circuit:	Push-pull	Push-pull
Supply voltage:	5 ... 24 V DC	8 ... 30 V DC
Power consumption (no load):	max. 50 mA	max. 50 mA
Permissible load/channel:	max. 50 mA	max. 50 mA
Pulse frequency:	max. 160 kHz	max. 160 kHz
Signal level high:	min. U_B -2,5 V	min. U_B –3 V
Signal level low:	max. 0,5 V	max. 2,5 V
Rise time t_r:	max. 1 µs	max. 1 µs
Fall time t_f:	max. 1 µs	max. 1 µs
Short circuit proof outputs:	yes	yes
Conforms to CE requirements acc. to EN 61000-6-1, EN 61000-6-4 and EN 61000-6-3		

Pulse rates available at short notice:

10, 25, 36, **50**, 60, **100**, 125, 180, **200**, 250, **360**, **500**, 512, **1000**, **1024**, 1080

**** Kübler encoder type 24xx meets German Railways standard**
An independent test laboratory (TTI-P-G115/96-01) approved by the German Accreditation Council (DAR) certified the compliance with the railway standard, according to EN 50121.
We will gladly send you a copy of the test report on request. When ordering an encoder to the railway standard, please be sure to state this explicitly on the order.

Deutscher Akkreditierungs Rat DAR

Applications:

- Pick and place machines
- Handling machines for electronic components
- Quality testing machines
- Medical machines
- Mail opening and mail stuffing machines
- Check weighers
- Labeling machines
- Mole machines (camera control)

Miniature Type 2400

Terminal assignment

Signal:	0V	$+U_B$	A	$\overline{A}$	B	$\overline{B}$	0	$\overline{0}$	
Colour:	WH	BN	GN	YE	GY	PK	BU	RD	
without inverted signal:	WH	BN	GN		YE		GY		

Isolate unused outputs before initial start-up

Dimensions:

Flange type 1 (Ø24 mm)

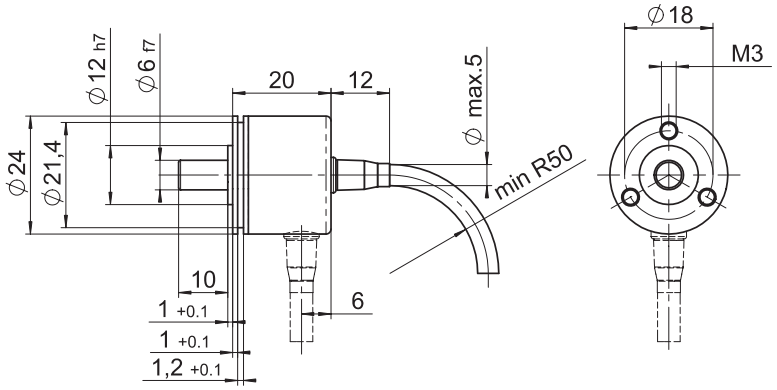

Flange type 2 (Ø 30 mm)
Flange type 3 (Ø 28 mm)

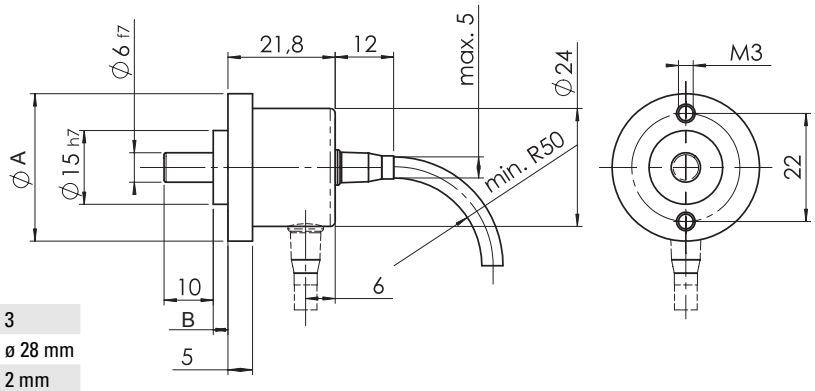

Flange type	2	3
A	ø 30 mm	ø 28 mm
B	3 mm	2 mm

Mounting advice:

Do not connect encoder and drive rigidly to one another at shafts and flanges! We recommend the use of suitable couplings (see chapter Accessories).

Order code:

05.2400.XXXX.XXXX

Range

Flange
- **1 = ø 24 mm**
- **2 = ø 30 mm**
- **3 = ø 28 mm**

Shaft
- **1 = ø 4 mm x 10 mm**
- **2 = ø 6 mm x 10 mm**
- 3 = ø 5 mm x 10 mm with flattening

Pulse rate
(e.g. 360 pulses=> 0360)

Type of connection
- 1 = Cable axial (2 m PVC cable ø 4,5 mm),
- **2 = Cable radial (**2 m PVC cable ø 4,5 mm**)**

Output and voltage supply
- 1 = Push-pull (without inverted signals)
  5 ... 24 V supply voltage
- **2 = Push-pull (with inverted signals)**
  5 ... 24 V DC supply voltage
- 3 = Push-pull (without inverted signals)
  8 ... 30 V DC supply voltage
- **4 = Push-pull (with inverted signals)**
  8 ... 30 V supply voltage

*Preferred types are marked in **bold** type.*

Stock types
- 05.2400.1122.0050
- 05.2400.1122.0100
- 05.2400.1122.0360
- 05.2400.1122.0500
- 05.2400.1122.1000
- 05.2400.1122.1024
- 05.2400.3321.1000
- 05.2400.3341.1000
- 05.2400.3331.0500
- 05.2400.3331.1000