Hollow shaft version economy Type 3720

- Economical version
- Compact unit size only ø 37 x 32 mm
- Very easy mounting. The encoder is mounted directly on the drive shaft without couplings. This saves up to 30 % cost and 60 % clearance compared to shaft versions.
- Temperature and ageing compensation
- Short circuit proof outputs
- Resolution up to 1024 ppr
- Protection up to IP 67
- Ex available as explosion proof zone 2 and 22
- Flange and cover made from a new High-Tech-Material (composite material)
- High component integration leads to low profile design, high performance and economical pricing
- "Tube Tech®" cable outlet guarantees 10x higher strain relief than traditional cabling methods plus higher IP-Protection.
- 1 ½" (37 mm) diameter housing suitable for replacing resolvers.

Mechanical characteristics:

Speed:	max. 6000 min^{-1}
Rotors moment of inertia:	approx. 1,4 x 10^{-6} kgm^2
Starting torque:	< 0,01 Nm
Weight:	approx. 0,1 kg
Protection acc. to EN 60 529:	bearing, shaft: IP 65 cable outlet: IP67
Working temperature:	–20° C up to +70 °C[1)3)]
Operating temperature:	–20° C up to +80 °C[2)3)]
Materials:	shaft: stainless steel; housing, flange: composite PPA, 40% KF (carbon fibre) cable: PVC
Shock resistance acc. to DIN-IEC 68-2-27:	1000 m/s^2, 6 ms
Vibration resistance acc. to DIN-IEC 68-2-6:	100 m/s^2, 10 ... 2000 Hz

1) At push pull output and Supply voltage > 15 V DC: max. 55 °C
2) At push pull output and Supply voltage >15 V DC: max. 60 °C
3) Higher temperatures up to 100 °C on request

Pulse rates available at short notice:

10, 50, 100, 180, 200, 250, 300, 360, 400, 500, 512, 600, 1000, 1024

Other pulse rates available on request

Electrical characteristics:

Output circuit:	RS 422 (TTL-compatible)	Push-pull (7272)	Push-pull (7272)
Supply voltage:	5 V (±5%)	5 ... 30 V DC	10 ... 30 V DC
Power consumption (no load) with inverted signal:	typ. 40 mA / max. 90 mA	typ.50 mA/ max.100 mA	typ.50 mA/ max.100 mA
Permissible load/channel:	max. ±20 mA	max. ±20 mA	max. ±20 mA
Pulse frequency:	max. 250 kHz	max. 250 kHz	max. 250 kHz
Signal level high:	min. 2,5 V	min. U_B–2,5 V	min. U_B–2,5 V
Signal level low:	max. 0,5 V	max. 0,5 V	max. 0,5 V
Rise time t_r	max. 200 ns	max. 1 µs	max. 1 µs
Fall time t_f	max. 200 ns	max. 1 µs	max. 1 µs
Short circuit proof outputs[1)]:	yes[2)]	yes	yes
Reverse connection protection at U_B:	no	no	yes
Conforms to CE requirements acc. to EN 61000-6-1, EN 61000-6-4 and EN 61000-6-3			

1) When supply voltage correctly applied
2) Only one channel at a time:
(at U_B = 5 V short circuit to channel, 0 V, or +U_B is permitted).

Applications:

– Substitute for resolvers
– Packaging machines
– Electrical machines
– Vehicles
– Conveyers, elevators
– Semiconductor machines e.g. pick & place, cutting ...
– Material handling
– Special machines.

Hollow shaft version economy Type 3720

Terminal assignment

Signal:	0 V	$+U_B$	A	$\overline{A}$	B	$\overline{B}$	0	$\overline{0}$	Shield
Colour:	WH	BN	GN	YE	GY	PK	BU	RD	

Using RS 422 outputs and long cable distances, a wave impedance has to be applied at each cable end.

Insulate unused outputs before initial startup.

Dimension

Short torque stop version;
Long torque stop version is dashed

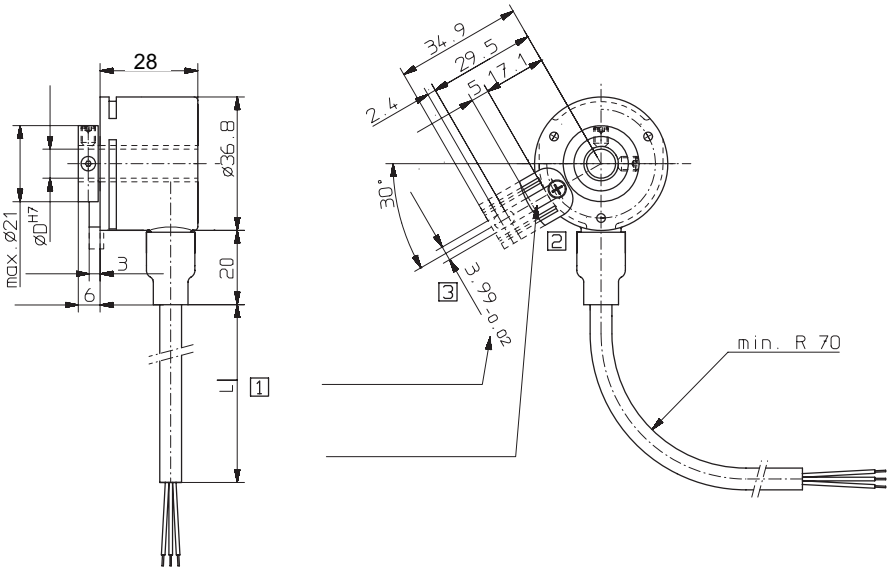

Stator coupling version

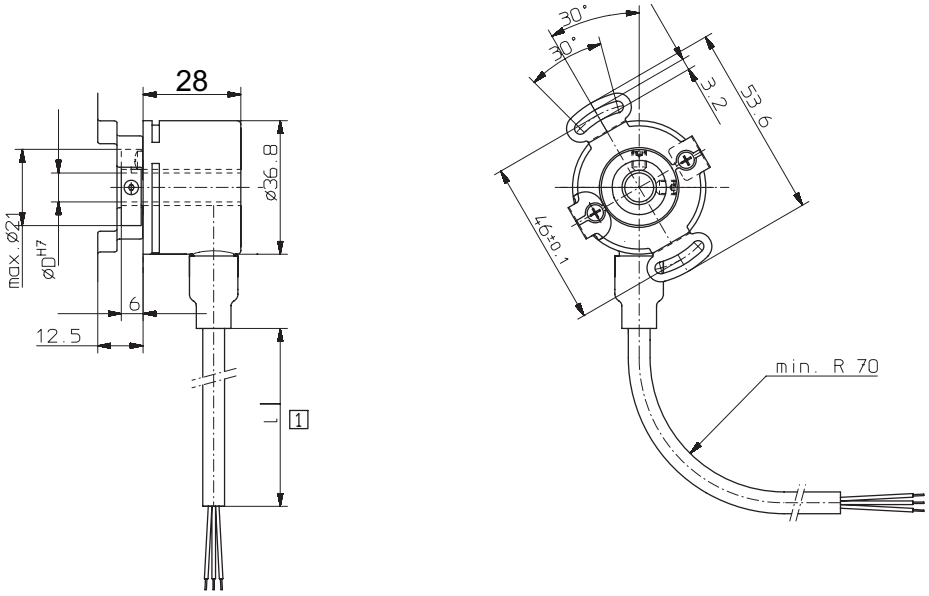

1 cable length 1, 2, 3 or 5 m

2 Slot for support torque, 3 mm deep

3 Recommended pin for long torque stop
Cyl. pin acc. to DIN 7 ø 4 mm

Hollow shaft version economy Type 3720

Mounting advice:

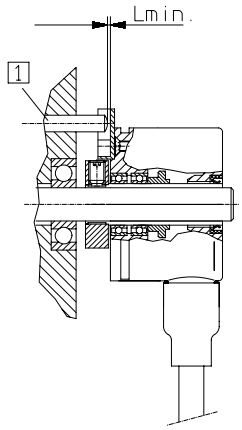

1 Cyl.-pin to DIN 7 ø 4 mm

1) Do not connect the encoder and drive rigidly to one another at the shaft and flange!

2) To mount a hollow shaft encoder, we recommend the use of a pin and with torque stop slot or a stator coupling.

3) When mounting the encoder ensure that Lmin. is greater than the axial play of the drive.
When using the long torque stop, a greater axial play is possible.

Order code: 8.3720.XXXX.XXXX

Range

Flange
- 1 = Hollow shaft with short torque stop
- 2 = Hollow shaft with long torque stop
- **5 = Hollow shaft with stator coupling**

Hollow shaft
- 1 = ø 4 mm
- 2 = ø 5 mm
- **3 = ø 6 mm**
- 4 = ø 1/4"
- **6 = ø 8 mm**

Pulse rate
(e.g. 250 pulses => 0250)

Type of connection
- **1 = Cable* radial (1 m PVC-cable)**
- 2 = Cable* radial (2 m PVC-cable)
- 3 = Cable* radial (3 m PVC-cable)
- 4 = Cable* radial (5 m PVC-cable)

Output circuit and Supply voltage
- **1 = RS 422: 5 V DC ±5 %**
- **3 = Push pull (with inverted signals) 5 ... 30 V DC**
- **4 = Push pull (with inverted signals) 10 ... 30 V DC**

Preferred types are ***fat*** *marked*

* "Tube Tech®" cable outlet guarantees 10x higher strain relief than traditional cabling methods plus higher IP-Protection.

Other cable lengths available on request.

Stock types
- 8.3720.5621.0050
- 8.3720.5621.0360
- 8.3720.5621.0500
- 8.3720.5621.1000
- 8.3720.5621.1024
- 8.3720.5611.0512
- 8.3720.5611.1024
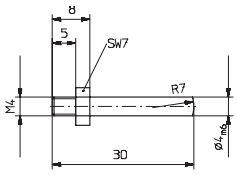
Accessories:
Cyl. pin acc. to DIN 7 ø 4 mm
Art-no.: 8.0010.4700.0000