Universal Type 5820

- Only 42 mm clearance needed
- Very easy mounting. The encoder is mounted directly on the drive shaft without couplings. This saves up to 30 % cost and 60 % clearance compared to shaft versions.
- Many variations
- Temperature and ageing compensation
- Short-circuit proof outputs
- Reverse connection protection for voltage supply
- RS 422 or push-pull output
- Resolution up to 5000 ppr
- Protection up to IP 66
- Ex available as explosion proof zone 2 and 22

Mechanical characteristics:

Speed without sealing:	max. 12000 min^{-1}
Speed with sealing[1]:	max. 6000 min^{-1}
Rotor moment of inertia:	appr. 6 x 10^{-6} kgm^2
Starting torque without sealing:	< 0,01 Nm
Starting torque with sealing:	< 0,05 Nm
Weight:	appr. 0,4 kg
Protection acc. to EN 60 529 without sealing:	IP 40
Protection acc. to EN 60 529 sealing:	IP 66
Working temperature without sealing:	-20° C up to +85 °C[2][3]
Working temperature with sealing:	-20° C up to +80 °C[2][3]
Operating temperature without sealing:	-20° C up to +90 °C[2][4]
Operating temperature with sealing:	-20° C up to +85 °C[2][4]
Shaft:	stainless steel
Shock resistance acc. to DIN-IEC 68-2-27	2000 m/s^2, 6 ms
Vibration resistance acc. to DIN-IEC 68-2-6:	100 m/s^2, 10...2000 Hz

[1] for continuous operation max. 3000 min^{-1} ventilated
[2] non-condensing
[3] 70 °C with Cable
[4] 80 °C with Cable

Pulse rates available at short notice:

10, 20, 25, 30, 50, 60, 100, 120, 125, 127, 150, 180, 200, 216, 240, 250, 254, 256, 300, 314, 360, 375, 400, 500, 512, 600, 625, 720, 745, 750, 762, 800, 900, 927, 1000, 1024, 1250, 1270, 1400, 1500, 1800, 2000, 2048, 2250, 2400, 2500, 3000, 3600, 4000, 4096, 5000

Other pulse rates on request

Electrical characteristics:

Output circuit:	RS 422 (TTL-compatible)	RS 422 (TTL-compatible)	Push-pull	Push-pull	Push-Pull (7272)
Supply voltage:	5 V (±5%) or 10 ... 30 V DC	5 ... 30 V DC	10 ... 30 V DC	5 ... 30 V DC	5 ... 30 V DC
Power consumption (no load) without inverted signal:	–	–	typ. 55 mA / max. 125 mA	typ. 55 mA / max. 125 mA	– –
Power consumption (no load) with inverted signals:	typ. 70 mA / max. 90 mA	typ. 70 mA / max. 90 mA	typ. 80 mA/ max.150 mA	typ. 80 mA/ max.150 mA	50 100
Permissible load/channel:	max. ±20 mA	max. ±20 mA	max. ±30 mA	max. ±30 mA	max. ±20 mA
Pulse frequency:	max. 300 kHz	max. 300 kHz	max. 300 kHz	max. 300 kHz	max. 300 kHz[3]
Signal level high:	min. 2,5 V	min. 2,5 V	min. UB-2,5 V	min. UB-1,5 V	min. Ub - 2,5 V
Signal level low:	max. 0,5 V	max. 0,5 V	max. 2,0 V	max. 2,0 V	max. 0,5 V
Rise time t_r	max. 200 ns	max. 200 ns	max. 1 µs	max. 1 µs	max. 1 µs
Fall time t_f	max. 200 ns	max. 200 ns	max. 1 µs	max. 1 µs	max. 1 µs
Short circuit proof outputs:[1]:	yes[2]	yes[2]	yes	yes	yes
Reverse connection protection at U_B:	5 V: no, 1 0 ... 30 V: yes	yes	yes	no	no
Conforms to CE requirements acc. to EN 61000-6-1, EN 61000-6-4 and EN 61000-6-3					

[1] When supply voltage correctly applied
[2] Only one channel at a time: When U_B=5 V, short-circuit to channel, 0 V, or +U_B is permitted.
When U_B=10 ... 30 V short-circuit to channel or 0 V is permitted.)
3) Cable length up to 30 m

Universal Type 5820

Terminal assignment

Sig.:	0 V	0 V	$+U_B$	$+U_B$	A	$\overline{A}$	B	$\overline{B}$	0	$\overline{0}$	⏚
		Sens[2]		Sens[2]							
12 pin plug, Pin:	10	11	12	2	5	6	8	1	3	4	PH[1]
Col.:	WH	GY PK	BN	BU RD	GN	YE	GY	PK	BU	RD	

[1] PH = Shield is attached to connector housing

[2] The sensor cables are connected to the supply voltage internally if long feeder cables are involved they can be used to adjust or controll the voltage at the encoder

- If the sensor cables are not in use, they have to be insulated or $0\,V_{Sensor}$ has to be connected to 0 V and $U_{BSensor}$ has to be connected to U_B

- Using RS 422 outputs and long cable distances, a wave impedance has to be applied at each cable end.

Insulate unused outputs before initial startup.

Dimensions

Flange Type 1

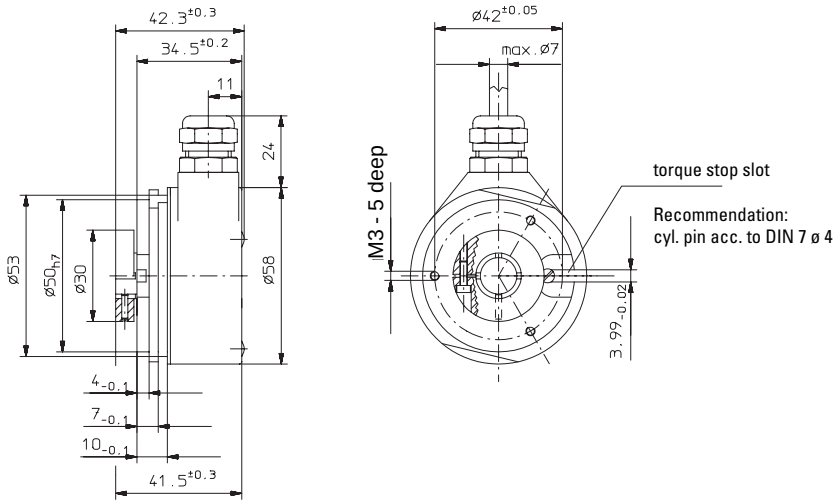

Flange Type 3 with stator coupling

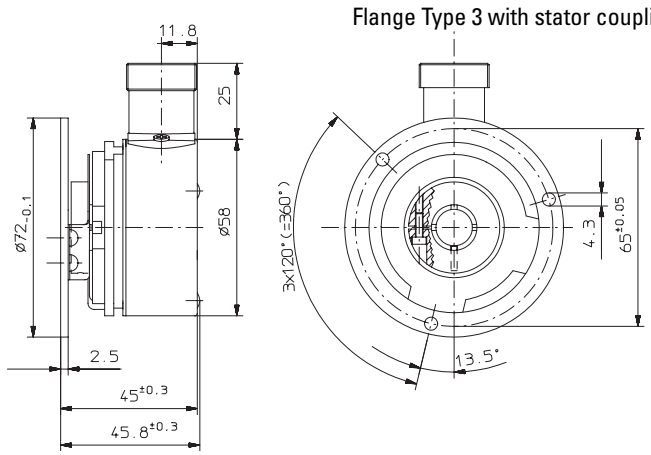

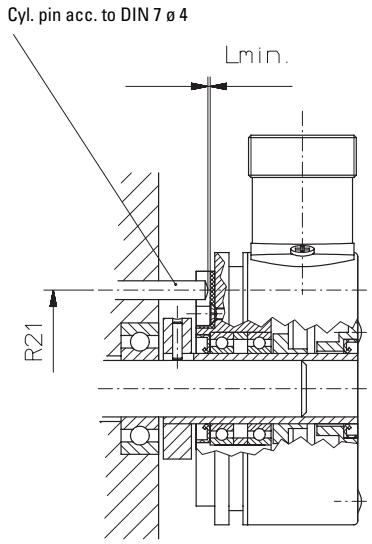

Mounting advice:

1) Do not connect encoder and drive rigidly to one another at shafts and flanges!

2) To mount a hollow shaft encoder, we recommend to use a torque stop pin that fits into the torque stop slot or a stator coupling.

3) When mounting the encoder ensure that Lmin. is greater than the axial play of the drive.

Universal Type 5820

Order code: 8.5820.XXXX.XXXX

Range

Flange
- 1 = Flange for through shaft
- 2 = Flange for blind hole shaft*
- **3 = Flange for through shaft and stator coupling**
- 4 = Flange for blind hole shaft* and stator coupling

*length of drive shaft ≤ 30 mm

Shaft
- 1 = ø 6 mm without seal
- **2 = ø 6 mm with seal**
- 3 = ø 8 mm without seal
- 4 = ø 8 mm with seal
- 5 = ø 10 mm without seal
- **6 = ø 10 mm with seal**
- 7 = ø 12 mm without seal
- **8 = ø 12 mm with seal**
- N* = ø 14 mm with seal
- P* = ø 15 mm with seal

*not for blind hole shaft

Prefered types are ***fat*** *marked*

Pulse rate
(e.g. 250 pulses=> 0250)

Type of connection
- 1 = Cable radial (1 m PVC-cable)
- **2 = radial 12pin plug without mating connector**

Type of connection and supply voltage
- **1 = RS 422 (with inverted signal) 5 V supply voltage**
- 2 = Push-pull (without inverted signal) 10 ... 30V supply voltage
- **3 = Push-pull (with inverted signal) 10 ... 30V supply voltage**
- 4 = RS 422 (with inverted signal) 10 ... 30 V supply voltage
- 5 = Push-pull (without inverted signal) 5 ... 30 V supply voltage
- 6 = Push-pull (with inverted signal) 5 ... 30 V supply voltage
- **7 = RS 422 (with inverted signal) 5 ... 30 V supply voltage**
- C = Push-pull (7272 with inverted signal) 5 ... 30 V supply voltage

Express types

8.5820.X1XX.XXXX	8.5820.X2XX.XXXX
8.5820.X3XX.XXXX	8.5820.X4XX.XXXX
8.5820.X5XX.XXXX	8.5820.X6XX.XXXX
8.5820.X7XX.XXXX	8.5820.X8XX.XXXX
8.5820.XPXX.XXXX	

Accessories

Corresponding mating connector to Type of connection 3 or 5,
12 pin: Art.-No.. 8.0000.5012.0000
pin assignment ccw
Corresponding mating connector with cable pre-assembled: Art.- No. 8.0000.6101.XXXX
(XXXX = length [m])
Set includes Connector type 8.0000.5012.0000 and cable typ 8.0000.6100.XXXX
(Cable PUR 10 x 0,14 mm^2 + 2 x 0,5 mm^2)

PIN allocation:

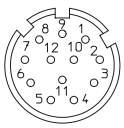

Dimensions:

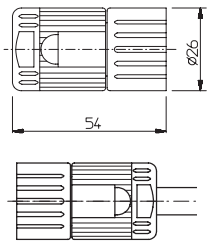

Mounting kit for hollow shaft encoder ø 58 mm:

Various mounting variations can be supplied
Delivery includes:
- 1 x parallel pin with thread
  Ord.-No. 8.0010.4700.0000
- 1 x mounting bracket
  Art.-no. T.035.009
- Screw M3x5
  Ord.-No. N.630.305
- 1 x long torque support slot
  Ord.-No. T.051.672

Complete set:
Ord.-No. 8.0010.4600.0000

Stator coupling two wings

– for highly dynamic applications
Includes:
- 1x coupling two wings
- 2x 2 screws

Complete as set:
Order-No.: 8.0010.4D00.0000
(see page 235)

Tether arm short

Order-No.: 8.0010.4R00.0000
(see page 238)