# GI328

## Features

- Encoder with compact dimension
- Speed up to 12000 rpm
- Resolution up to 2048 pulses

## Electrical data

| | |
|---|---|
| Operating voltage | 5 VDC ±10 % or 10...30 VDC |
| Current consumption | 80 mA (without load) |
| Scanning frequency | 50 kHz (< 500 pulses)<br>100 kHz (> 500 pulses) |
| Output stages | |
| 5 VDC | Line driver to RS422 |
| 10...30 VDC | push-pull output, short-circuit-proof |

## Output signals

Signals with clockwise rotation when looking at the flange.

Output signals 5 VDC, line driver

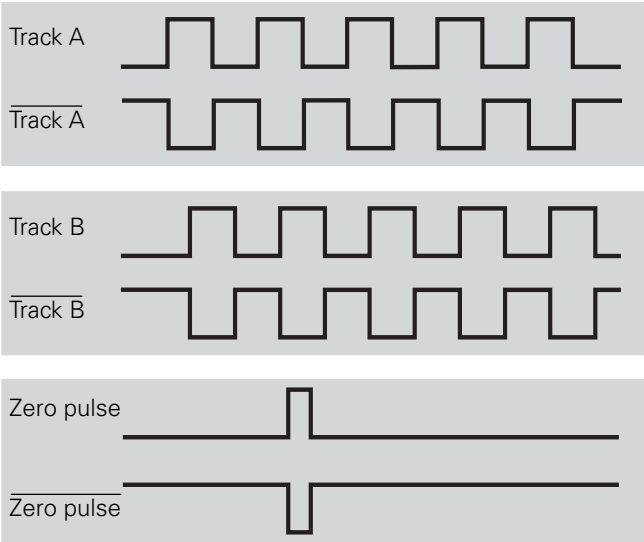


Output signals 10 - 30 VDC, push-pull output

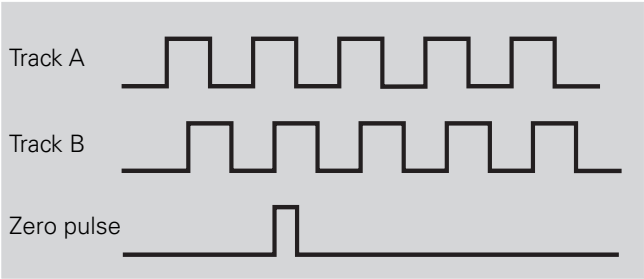


## Mechanical data

| | |
|---|---|
| Speed | Max. 6000 rpm (IP 64)<br>Max. 12000 rpm (IP 42) |
| Operating torque | < 0.0075 Nm (3000 rpm/20 °C) |
| Shaft loading | |
| axial | < 10 N |
| radial | < 10 N |
| Material | |
| Flange | Aluminium |
| Housing | Black polyamide |
| Shaft | Stainless steel |
| Weight | Approx. 85 g |

## Ambient conditions

| | |
|---|---|
| Operating temperature | -20...+85 °C |
| Protection type | IP 42 or IP 64 |
| Humidity | Max. relative humidity 95 %, non-condensing |
| Resistance | |
| Vibration | DIN EN 60068-2-6<br>≤100 m/s², 16-200 Hz |
| Shock | DIN EN 60068-2-27<br>≤500 m/s², 11 ms |
| Interference resistance | DIN EN 61000-6-2 |
| Emitted interference | DIN EN 61000-6-4 |

# GI328

## Order designation

| Order No. | Shaft |
|---|---|
| 0 | Shaft 5 mm, IP 64 |
| 1 | Shaft 5 mm, IP 42 |

Operating Voltage/Signals

| | |
|---|---|
| 22 | 5 VDC / Line driver RS422 |
| 60 | 10...30 VDC / Push-pull |

Connection

| | |
|---|---|
| 31 | Cable 1 m, axial |
| 41 | Cable 1 m, radial |

Additional cable lengths on request.

Pulse No/Order No.

| Pulse | No. | Pulse | No. |
|---|---|---|---|
| 5 | 49 | 400 | 14 |
| 50 | 39 | 500 | 15 |
| 60 | 40 | 1000 | 22 |
| 100 | 41 | 1024 | 22 |
| 200 | 06 | 2000 | 28 |
| 250 | 09 | 2048 | 29 |
| 360 | 13 | | |

Additional pulse numbers on request.

**GI328.** □□□□□□□□

## Connection assignment

**Line driver 5 VDC**

| Cable Color | Assignment |
|---|---|
| brown | UB |
| green | Track A |
| red | Track A inv. |
| yellow | Track B |
| blue | Track B inv. |
| pink | Track N (zero pulse) |
| gray | Track N inv. (zero pulse) |
| white | GND |
| Cable shield | Shield connected to flange |

**Push-pull output 10...30 VDC**

| Cable Color | Assignment |
|---|---|
| brown | UB |
| green | Track A |
| yellow | Track B |
| pink | Track N (zero pulse) |
| white | GND |
| Cable shield | Shield connected to flange |

Recommendation: Please use wires twisted in pairs for cable lengths of more 10 m or more.
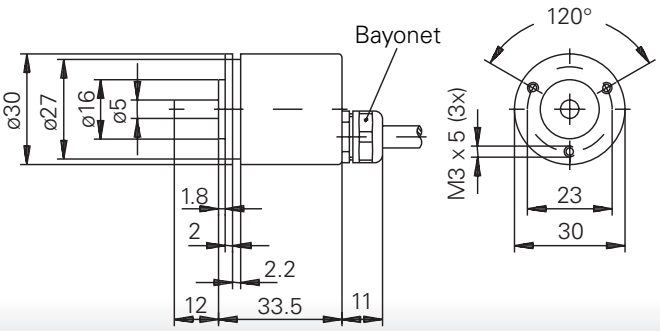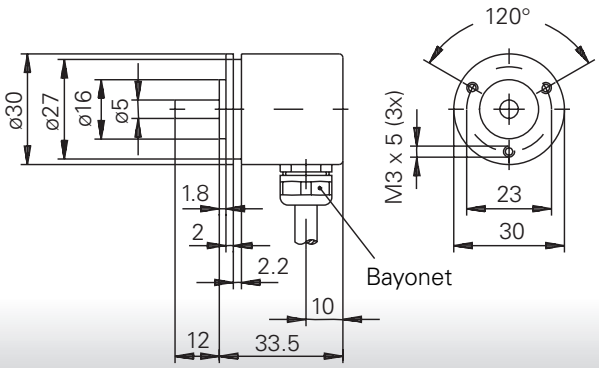
## Dimensions