Eltra®

UNI EN ISO 9001

EAX80A / D

FLAMEPROOF SINGLETURN ABSOLUTE ENCODER

Absolute Encoders

Flameproof encoders for applications within explosive and dangerous areas.
- Resolutions up to 8192 imp/turn (13 bit).
- Different electronic configurations available with a power supply up to 28 Vdc.
- Output cable.
- Different flanges available.
- Speed rotation up to 3000 rpm.
- Protection up to IP64.

Ordering codes

In case of a particular Customer variant separate by a full stop

EAX 80 A 512 G 5 N N X 10 X 3 P R . XXX

EAX = flameproof singleturn absolute

80 = body dimension

A = mod.EAX80A
D = mod.EAX80D
Type of flanges

2 / 4 / 8 / 16 / 32 / 64 / 128 / 256 / 512 / 1024 / 2048 / 4096 / 8192
90 / 180 / 360 / 720 / 1440 / 2880
225 / 450 / 900 / 1800 / 3600
250 / 500 / 1000 / 2000 / 4000
Resolutions
N.B.: For impulse availability contact our offices

B = Binary
G = Gray (standard)
Code

5
8 ÷ 28
Encoder power supply (Vdc)

N = NPN (Standard negative logic)
C = NPN OPEN COLLECTOR (Standard negative logic)
R = PNP (Standard positive logic)
U = PNP OPEN COLLECTOR (Standard positive logic)
P = PUSH PULL with short circuit protection (Standard positive logic)
S = SSI (Serial Synchronous Interface)
Electronics output configuration
N.B.: For the optionals on the output configurations contact our offices

L = Latch to indicate only with binary code
T = Tristate only with Push Pull electronic
S = Strobe to indicate only with binary code
X = indicate if output SSI
Options

N = Negative
P = Positive
X = indicate if output SSI
Logics

10 = ø10 g6 mm
Shaft diameter

X = IP64
Protection

3 = 3000
R.P.M.

P = standard output cable 1.5 m
G = threeaded union 1/2" Gas

R = radial

XXX = Particular Customer variants indicated by a progressive number from 001 to 999

EAX80A

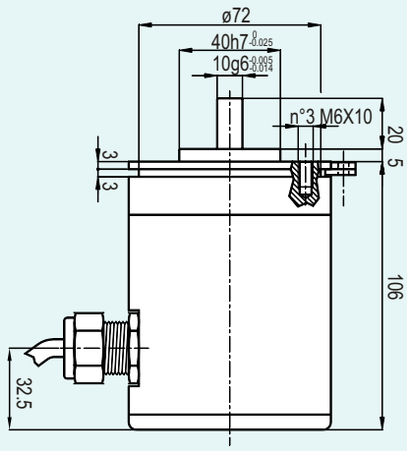

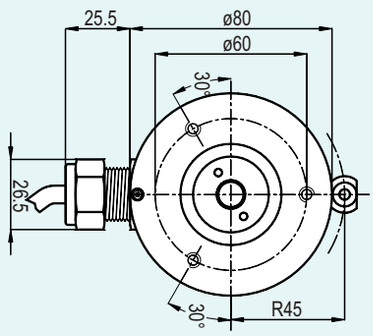

EAX80D

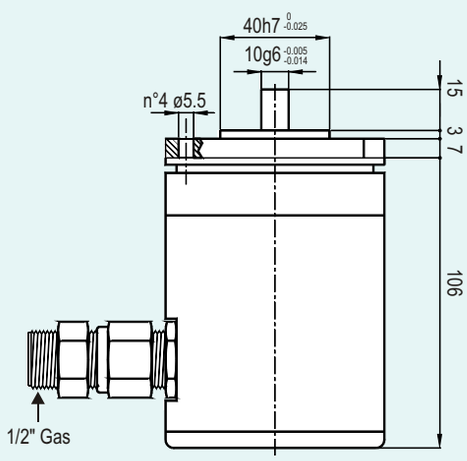

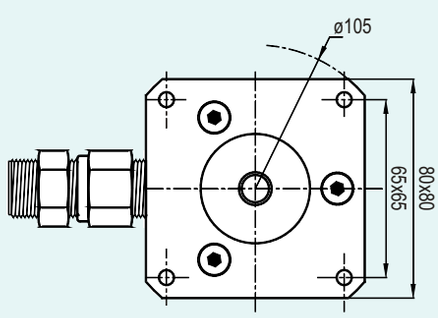

Electronic Characteristics

Resolution	2 / 4 / 8 / 16 / 32 / 64 / 128 / 256 / 512 / 1024 / 2048 / 4096 / 8192 90 / 180 / 360 / 720 / 1440 / 2880 225 / 450 / 900 / 1800 / 3600 250 / 500 / 1000 / 2000 / 4000
Power supply	5 Vdc / 8 ÷ 28 Vdc
Current consumption without load	100 mA
Max commutable current	50 mA per channel
Electronic output configuration	NPN (negative logic) NPN Open Collector (negative logic) PNP (positive logic) PNP Open Collector (positive logic) PUSH PULL (positive logic) SSI (Serial Synchronous Interface)
Max output frequency	100 KHz output code $F = \frac{RPM \times Resolution}{60}$

Mechanical Characteristics

Shaft diameter (mm)	ø10 g6
R.P.M. Max	3000
Shock	50 G per 11 msec
Vibrations	10G 10 ÷ 2000 Hz
Max shaft load	200 N (20 Kp) axial 200 N (20 Kp) radial
Bearings life	10^9 revolutions
Bearings	n°2 ball bearings
Shaft material	Stainless steel AISI303
Body material	Aluminium D11S - UNI 9002/5
Operating Temperature	0° ÷ +60°C
Storage Temperature	-15° ÷ +70°C
Weight	1200 g

Flameproof encoders at EExdIIC T6 standard

EN 50.014 / EN 50.018
CESI certified number: EX-97.D.015

Eexd IIC T6

EEx: electrical system for explosive and dangerous areas.

d: anti explosion box.

II: electrical system which can operate in dangerous areas except for the mines where "grisou" gas is present.

C: type of protection based on the special interstice designed to have the maximum security on the flameproof encoder (MESG). C= maximum security

T6: maximum encoder surface temperature 85°C.

AS006GB1101

Eltra
Via Monticello di Fara, 32 bis - Sarego (VI) - ITALY - Tel.+39 0444 436489 R.A. - Fax +39 0444 835335
http://www.eltra.it E-mail:eltra@eltra.it

ELTRA reserves the right to make any modifications without prior notice