Sendix Incremental, 5000

- **Universal industrial encoder family on a new technology platform**
- **Incremental, up to 3600 ppr., Short circuit proof outputs, High scanning rate**
- **Explosion-proof models also available for Zones 2 and 22**

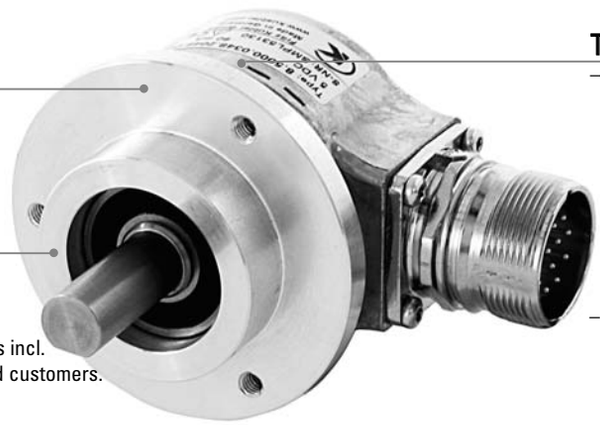

Compact:
– Housing 50 mm dia., mounting depth 46 mm
Flange is compatible with all 58 mm standard flanges

Flexible in use:
– Many connection options incl. M12 connector
– 5 ... 30 V DC power supply reduces number of models
– Compatible with many global industrial standards incl. US versions. Simplified usage for export-oriented customers. UL approval (pending)

Tough:
– New, particularly sturdy bearing construction (Safety lock ™ Design) protects the encoder from damage caused by too high an axial shaft loading during installation, by rough treatment from vibration and temperature changes during continuous operation
– Temperature range -40 to +85 degrees C, with IP 67 protection rating, permits use in all areas of industry
– Solid, die-cast housing; metal disc with up to 1024 ppr

Mechanical characteristics:

Speed IP 65[1]:	max. 12000 min^{-1}
Speed IP 67[2]:	max. 6000 min^{-1}
Rotor moment of inertia:	approx. 1,8 x 10^{-6} kgm^2
Starting torque:	< 0,01 Nm, IP 65 < 0,05 Nm. IP 67
Radial load capacity shaft:	80 N
Axial load capacity shaft::	40 N
Weight:	ca. 0,4 kg
Protection acc. to EN 60 529 without shaft sealing:	IP 65
Protection acc. to EN 60 529 with shaft sealing:	IP 67
Working temperature:	-40 °C[3] ... +85 °C
Shaft:	stainless steel, h8
Shock resistance acc. to DIN-IEC 68-2-27:	2500 m/s^2, 6 ms
Vibration resistance to DIN-IEC 68-2-6:	100 m/s^2, 10...2000 Hz

[1] for continuous operation max. 6000 min^{-1}
[2] for continuous operation max. 3000 min^{-1}
[3] with connector: -40 °C,
cable fixed: -30 °C, cable moved: -20 °C

Pulse rates available at a short notice:
1, 5, 10, 12, 36, 50, 60, **100**, **200**, 250, 256, **360**, 400, **500**, 512,600, 800, **1000**, **1024**, 1200, 2000, 2048, **2500**, **3600**

Other pulse rates on request

Electrical characteristics:

Output circuit:	RS 422 (TTL compatible)	RS 422 (TTL compatible)	Push-Pull	Push-Pull (7272)
Supply voltage:	5 ... 30 V DC	5 V ±5%	10 ... 30 V DC	5 ... 30 V DC
Power consumption (no load):	typ. 40 mA / max. 90 mA	typ. 40 mA max. 90 mA	typ. 50 mA max. 100 mA	typ. 50 mA max. 100 mA
Permissible load/channel:	max. ±20 mA	max. ±20 mA	max. ±30 mA	max. ±20 mA
Pulse frequency:	max. 300 kHz	max. 300 kHz	max. 300 kHz	max. 300 kHz[3]
Signal level high:	min. 2,5 V	min. 2,5 V	min. UB - 1V	min. UB-2,0 V
Signal level low:	max. 0,5 V	max. 0,5 V	max. 0,5 V	max. 0,5 V
Rise time t_r	max. 200 ns	max. 200 ns	max. 1 µs	max. 1 µs
Fall time t_f	max. 200 ns	max. 200 ns	max. 1 µs	max. 1 µs
Short circuit proof outputs[1]:	yes[2]	yes[2]	Yes	yes
Reverse connection protection at U_B:	yes	no	Yes	no
Conforms to CE requirements acc. to DIN-IEC 68-2-27, DIN-IEC 68-2-6, EN 60 529, EN 61 000-6-2, EN 61 000-6-3, EN 61000-6-4				

1) When supply voltage correctly applied
2) Only one channel at a time:
(when UB=5 V, short-circuit to channel, 0 V, or +UB is permitted.)
(when UB=5-30 V, short-circuit to channel or 0 V is permitted.)
3) cable length up to 30 m

Sendix Incremental, 5000

Dimensions:

Synchronous flange

ø 50,8 mm [2.0 inch]
M12, M23 connector and cable versions
(Flange type 5 and 6)

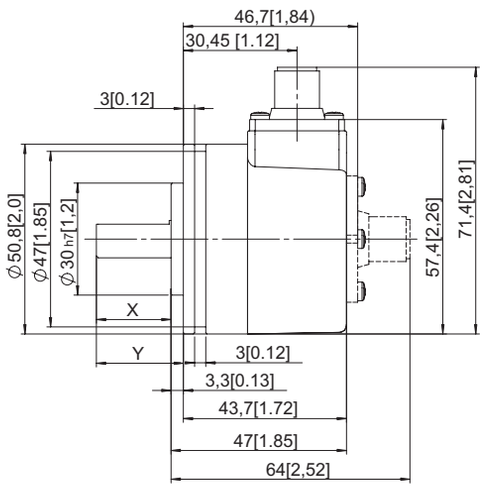

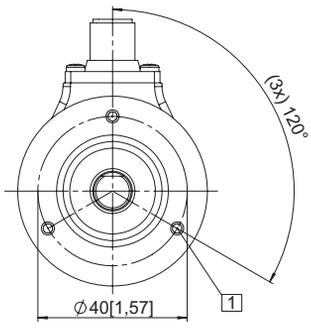

1 M3, 6 [0.24] deep

Synchronous flange

ø 50,8 mm [2 inch]
MIL-connector version

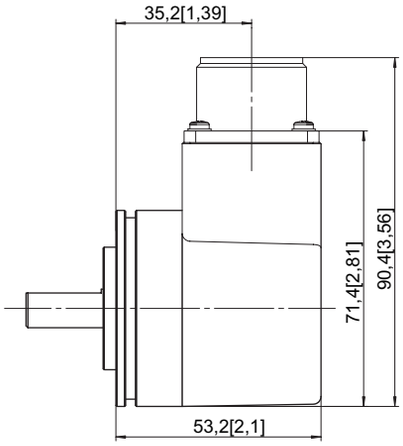

Synchronous flange

ø 58 mm
M12, M23 and cable versions
(Flange type A and B)

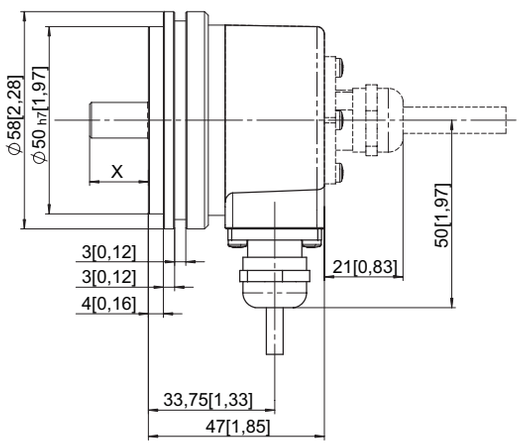

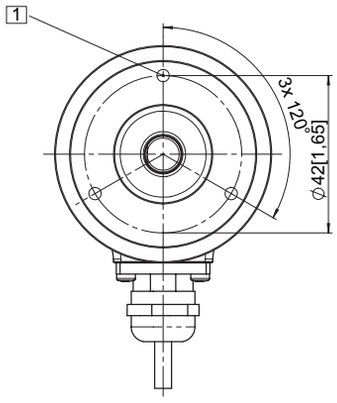

1 M4, 6 deep [0.24] deep

Synchronous flange

ø 58 mm
MIL-connector version

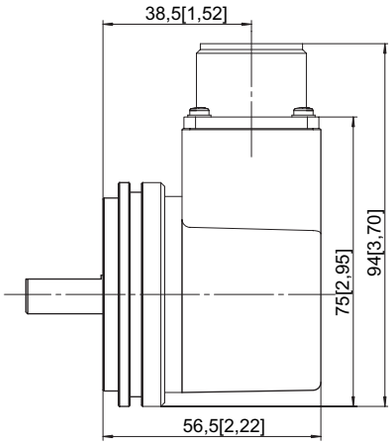

Shaft versions

Order code for shaft	Shaft	length **X**	length **Y**
1	ø 6 mm	10 mm	13.3 mm
2	ø 1/4 "	15,7 mm	3/4"
3	ø 10 mm	20 mm	23.3 mm
4	ø 3/8 "	15,7 mm	3/4"
5	ø 12 mm	20 mm	23.3 mm
6	ø 8 mm	15 mm	18.3 mm

Mounting advice:

Do not connect encoder and drive rigidly to one another at shafts and flanges! Always use couplings to prevent shaft overload (see accessories chapter).

Sendix Incremental, 5000

Clamping flange

ø 58 mm
M12, M23 connector and cable versions
(Flange type 7 and 8)

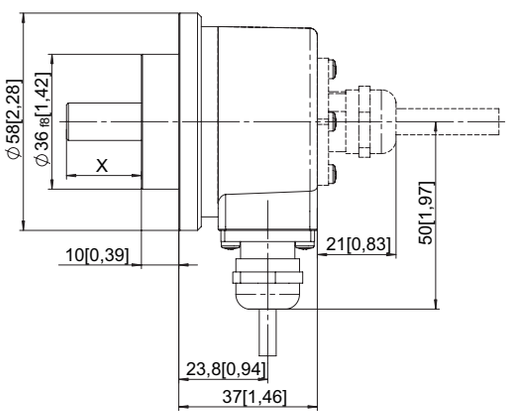

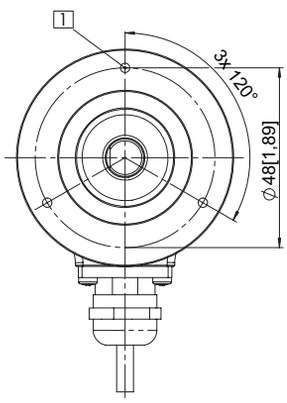

1 M3, 6 [0.24] deep

Clamping flange

ø 58 mm
MIL-connector version

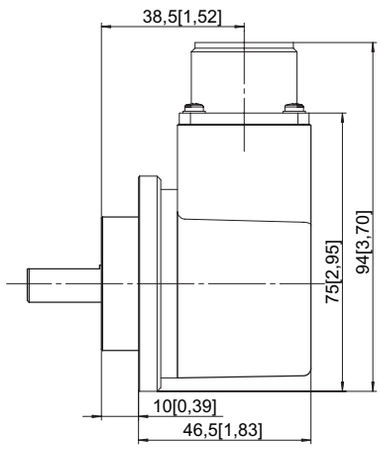

Rectangular flange

□ 63,5 mm [2.5 inch]
M12, M23 connector and cable versions
(Flange type C and D)

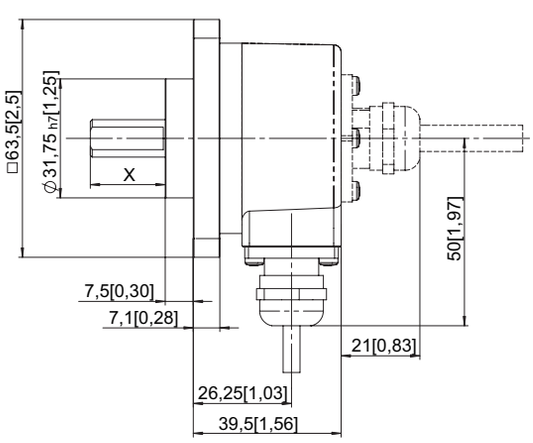

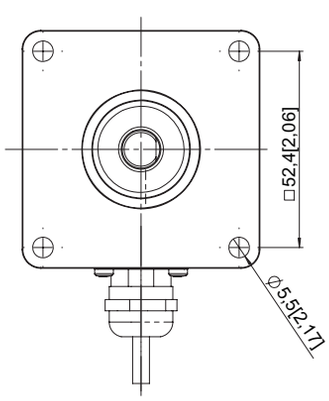

Rectangular flange

□ 63,5 mm [2.5 inch]
MIL-connector version

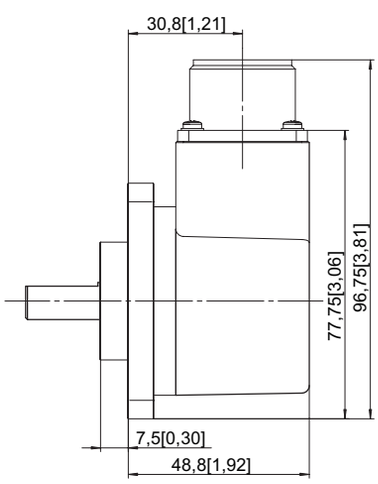

Shaft versions

Order code for shaft	Shaft	length **X**
1	ø 6 mm	10 mm
2	ø 1/4 "	7/8"mm
3	ø 10 mm	20 mm
4	ø 3/8 "	7/8" mm
5	ø 12 mm	20 mm
6	ø 8 mm	15 mm

Sendix Incremental, 5000

Terminal assignment:

Signal:	0 V GND	$+U_B$	0 V Sens	+Ub Sens	A	$\overline{A}$	B	$\overline{B}$	Z	$\overline{Z}$	Shield
M23 , 12 pin connector, Pin:	10	12	11	2	5	6	8	1	3	4	–[1)]
M12, 8 pin connector, Pin:	1	2			3	4	5	6	7	8	–[1)]
MIL (MS styled), 10 pin con. Pin:	F	D		E	A	G	B	H	C	I	J[1)]
MIL (MS styled), 7pin con. Pin:	F	D		E	A	–	B	–	C	–	G[1)]
Cable colour:	WH	BN	GY PK	RD BU	GN	YE	GY	PK	BU	RD	Shield

1)shield is attached to connector housing

Insulate unused outputs before initial startup

Top view of mating side, male contact base:

Type	8 pin M12 connector	12 pin M23 connector	MIL connector 7-pin	10 pin
View	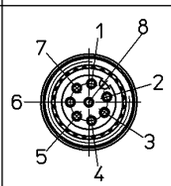	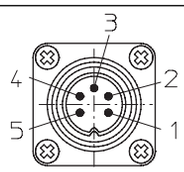	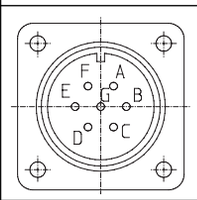	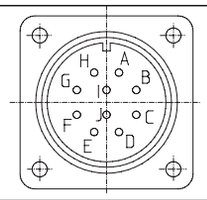
Order code:	8.5000.XXX**3**.XXXX 8.5000.XXX**4**.XXXX	8.5000.XXX**7**.XXXX 8.5000.XXX**8**.XXXX	8.5000.XXX**W**.XXXX	8.5000.XXX**Y**.XXXX
Corresponding mating connector:	05.CMB-8181-0	8.000.5012.0000	8.4000.5052.0000	8.0000.5062.0000

Order code

8.5000.XXXX.XXXX

Range

Flange
- 5 = Synchronous flange, metric, ø 50,8, IP67
- 6 = Synchronous flange, metric, ø 50,8, IP65
- 7 = Clamping flange, metric, ø 58, IP 67
- **8 = Clamping flange, metric, ø 58, IP65**
- A = Synchronous flange, ø 58, IP 67
- **B = Synchronous flange, ø 58, IP 65**
- C = Rectangular flange 2,5", IP 67
- D = Rectangular flange 2,5", IP 65

Shaft (ø x L)
- **1 = ø 6 mm x 10 mm**
- 2 = ø 1/4 inch x 7/8"
- **3 = ø 10 mm x 20 mm**
- 4 = ø 3/8 inch x 7/8"
- 5 = ø 12 mm x 20 mm
- 6 = ø 8 mm x 15 mm

Preferred types are ***fat*** *marked*

Pulse rate
(e.g.. 100 pulses => 0100)

Type of connection
- 1 = Cable axial (1 m PVC cable)
- **2 = Cable radial (1 m PVC cable)**
- 3 = Connector axial 8 pin M12
- **4 = Connector radial 8 pin M12**
- 7 = Connector axial 12 pin M23
- **8 = Connector radial 12 pin M23**
- W = Connector 7 pin MIL.-specified
- Y = Connector 10 pin MIL.-specified

Note: all connector versions without mating connector

Output circuit and supply voltage
- 1 = RS 422 (with inverted signal) 5 ... 30 V supply voltage
- 2 = Push-pull (7272 with inverted signal) 5 ... 30 V supply voltage
- **4 = RS 422 (with inverted signal) 5 V supply voltage**
- **5 = Push-pull (with inverted signal) 10 ... 30 V supply voltage**

Accessories:

Cables and connectors see chapter Connection Technology in catalogue Sensor Technology

Corresponding mating connector:
M12: 05.CMB-8181-0
M23: 8.000.5012.0000
MIL-connector
7-pin: 8.4000.5052.0000
10-pin: 8.0000.5062.0000