High resolution Type 5805

- Sturdy model to industry standard, Ø58 mm housing
- Resolution up to 36000 ppr (internally interpolated)
- Pulse frequency up to 800 kHz
- IP 65
- Temperature and ageing compensation
- Short-circuit proof outputs
- Reverse connection protection (at U_B= 10 ... 30 V DC)
- Highly flexible PUR-cable
- High shaft load
- Many variations, also customized versions
- Alarm output (optional)
- available as explosion proof zone 2 and 22

Mechanical characteristics:

Speed:	max. 12000 min^{-1}
Rotor moment of inertia:	appr. 1,8 x 10^{-6} kgm^2
Starting torque:	< 0,01 Nm
Radial load capacity of shaft*:	80 N
Axial load capacity of shaft:*:	40 N
Weight:	appr. 0,4 kg
Protection acc. to EN 60 529:	IP 65
Working temperature:	–20 °C ... +85 °C[1)]
Operating temperature:	-20 °C ... +90 °C[1)]
Shaft:	stainless steel
Shock resistance acc. to DIN-IEC 68-2-27	1000 m/s^2, 6 ms
Vibration resistance acc. to IEC 68-2-6:	100 m/s^2, 10 ... 2000 Hz

*View also diagrams on page 25

1)Constant trailing: -20 ... +70 °C

Pulse rates available at short notice:
6000, 7200, 8000, 8192, 9000, 10000, 18000, 25000, 36000

Other pulse rates on request

Electrical characteristics:

Output circuit:	RS 422 (TTL-compatible)	Push-pull
Supply voltage:	5 V (±5%) or 10 ... 30 V DC 10 ... 30 V DC	
Power consumption (no load) without inverted signal:	–	typ. 90 mA / max. 135 mA
Power consumption (no load) with inverted signals:	typ. 70 mA / max. 120 mA	typ. 115 mA/ max.160 mA
Permissible load/channel:	max. ±20 mA	max. ±30 mA
Pulse frequency:	max. 800 kHz	max. 600 kHz
Signal level high:	min. 2,5 V	min. U_B – 2,5 V
Signal level low:	max. 0,5 V	max. 2,0 V
Rise time t_r	max. 200 ns	max. 1 µs
Fall time t_f	max. 200 ns	max. 1 µs
Short circuit proof outputs:[1)]	yes[2)]	yes
Reverse connection protection at UB:	no; 10 ... 30 V: yes	yes
Conforms to CE requirements acc. to EN 61000-6-1, EN 61000-6-4 and EN 61000-6-3		

1)When supply voltage correctly applied

2)Only one channel at a time: (when U_B = 5 V, short-circuit to channel, 0 V, or +U_B is permitted.)
(when U_B = 10 ... 30 V short-circuit to channel or 0 V is permitted.)

Terminal assignment

Signal:	0V	0V Sensor2)	+U_B	+U_B Sensor2)	A	$\overline{A}$	B	$\overline{B}$	0	$\overline{0}$	Shield
12 pin plug, Pin:	10	11	12	2	5	6	8	1	3	4	PH[1)]
Cable colour:	WH 0,5 mm^2	WH	BN 0,5 mm^2	BN	GN	YE	GY	PK	BU	RD	

1)PH = Shield is attached to connector housing

2)The sensor cables are connected to the supply voltage internally if long feeder cables are involved they can be used to adjust or controll the voltage at the encoder

- If the sensor cables are not in use, they have to be insulated or 0 V_{Sensor} has to be connected to 0 V and $U_{BSensor}$ has to be connected to U_B

- Using RS 422 outputs and long cable distances, a wave impedance has to be applied at each cable end.

Insulate unused outputs before initial startup.

High resolution Type 5805

Dimensions

Clamping flange ø 58

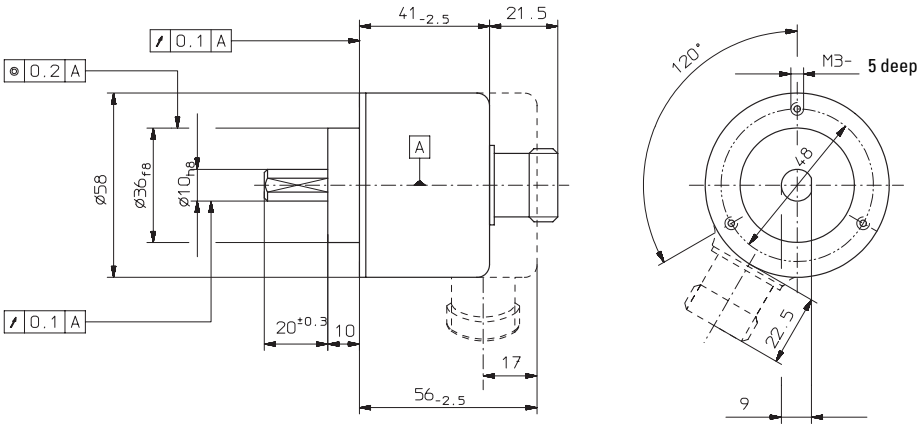

Synchronous flange ø 58

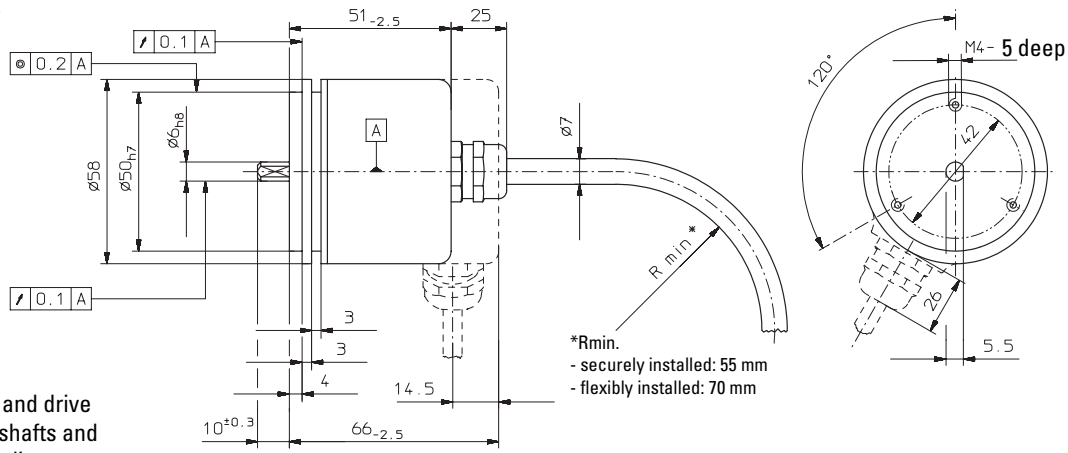

*Rmin.
- securely installed: 55 mm
- flexibly installed: 70 mm

Mounting advice:
Do not connect encoder and drive rigidly to one another at shafts and flanges! Always use couplings to prevent shaft overload (see accessories chapter).

Top view of mating side, male contact base:

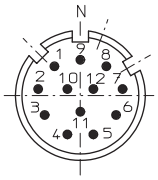

Order code: 8.5805.XXXX.XXXXX

Range

Flange
- 1 = **Clamping flange ø 58**
- 2 = **Synchronous flange ø 58**

Shaft
- **1 = ø 6 mm x 10 mm**
- **2 = ø 10 mm x 20 mm**

Type of connection and supply voltage
- **4 = RS 422 (with inverted signal) 5 V supply voltage**
- 5 = RS 422 (with inverted signal) 10 ... 30 V supply voltage
- **6 = Push-pull (with inverted signal) 10 ... 30 V supply voltage**
- 7 = Push-pull (without inverted signal) 10 ... 30 V Supply voltage

Prefered types are ***fat*** *marked*

Pulse rate
(e.g. 18000 pulses=> 18000)

Type of connection
- 1 = Cable axial (1 m PUR-Cable)
- 2 = Cable radial (1 m PUR-Cable)
- 3 = axial 12 pin plug without mating
- **5 = radial 12 pin plug without mating**

Accessories:

Corresponding mating connector of connection type 3 or 5: Art.-no. 8.0000.5012.0000

Further accessories see accessories chapter