Eltra®

UNI EN ISO 9001

EX80A / D
FLAMEPROOF ENCODERS

Flameproof encoders

Flameproof encoders for applications within explosive and dangerous areas
- Resolutions up to10000 imp/turn with zero
- Different electronic configurations available with a power supply up to 28 Vdc
- Max output frequency up to 300 KHz
- Output cable
- Different flanges available
- Speed rotation up to 3000 rpm
- Protection up to IP64

Ordering Codes

In case of particular Customer variant seperate with a full stop

EX 80 A 1000 Z 5/28 P 10 X 3 P R . XXX

EX = Flameproof encoder by EExd IIC T6 standard

80 = body dimension

A = mod.EX80A
D = mod.EX80D
Type of Flanges

from **1** to **10000** imp./turn **Resolutions**
N.B.: For impulse availability contact directly our offices

S = without zero impulse
Z = with zero impulse
Zero impulse

5 ÷ 28 = power supply **Encoder powers supply (Vdc)**
N.B.: LINE DRIVER available only with 5 Vdc or 8 ÷ 24 Vdc power supply

N = NPN
C = NPN OPEN COLLECTOR
P = PUSH PULL
L = LINE DRIVER
Electronic output configuration
N.B.: For the optionals on output configurations see the output incremental connections card.

10 = ø 10 mm **Shaft Diameter**

X = Standard IP64 **Protection**

3 = 3000 **R.P.M.**

P = standard output cable 1.5 m
G = threaded union 1/2" Gas

R = radial

XXX = Particular customer variants indicated by a progressive number from 001 to 999

EX80A

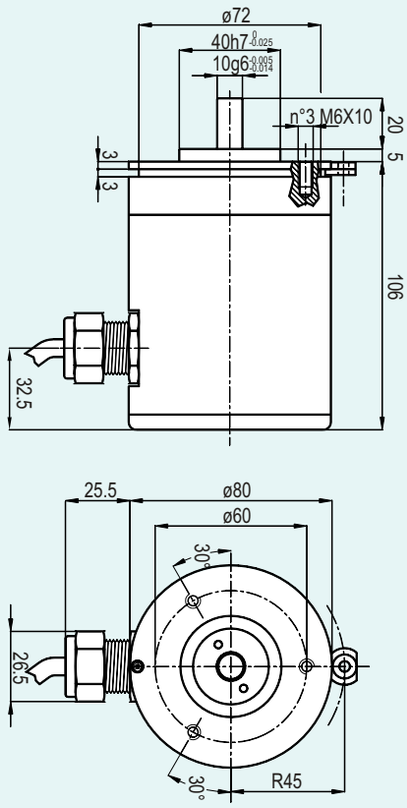

EX80D

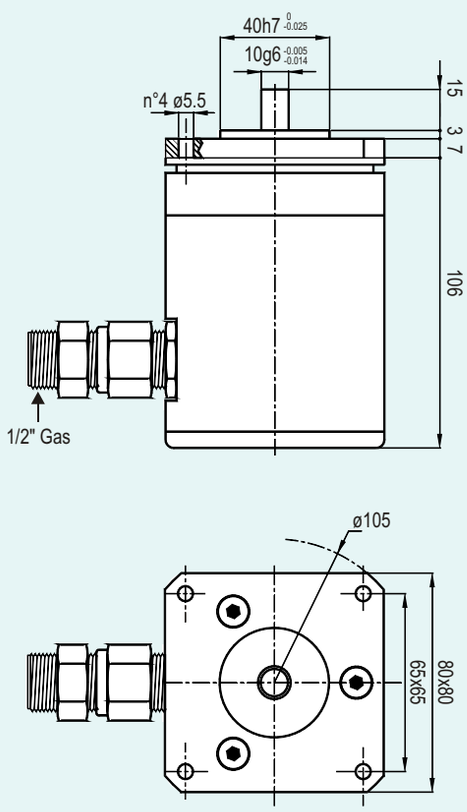

Electronic Characteristics

Resolutions	From 1 to 10000 impulses / turn
Power supply	5 ÷ 28 Vdc N.B.: LINE DRIVER only with 5 / 8 ÷ 24 Vdc power supply
Current consumption without load	80 mA
Max output current	50 mA per channel 20 mA per channel with LINE DRIVER
Electronic output configuration	NPN / NPN OPEN COLLECTOR / PUSH PULL / LINE DRIVER
Max output frequency	Max 300 KHz **F=** $\frac{\text{RPM x Resolution}}{60}$

Mechanical Characteristics

Shaft Diameter (mm)	ø10 g6 $\left(^{-0.005}_{-0.014}\right)$
R.P.M. Max	3000 continuous
Shock	50 G per 11 msec (with flexible disc) 20 G per 11 msec (with glass disc)
Vibrations	10G 10 ÷ 2000 Hz
Max shaft load	200 N (20 Kp) axial 200 N (20 Kp) radial
Bearings life	10^9 revolutions
Bearings	n°2 Ball bearings
Shaft material	Stainless steel AISI303
Body Material	AluminiumD11S - UNI 9002/5
Operating temnperature	0° ÷ +60°C
Storage Temperature	-25° ÷ +70°C
Weight	1200 g

Flameproof encoders at EExdIIC T6 standard

EN 50.014 / EN 50.018

CESI certified number: EX-97.D.015

EExd IIC T6

EEx: Electrical system for explosive and dangerous areas.

d: Anti explosion box.

II: Electrical system which can operate in dangerous areas except for the mines where "grisou" gas is present.

C: Type of protection based on the special interstice designed to have the maximum security on the flameproof encoder (MESG) C= maximum security

T6: Maximum encoder surface temperature 85°C.

IN010GB0302A

Eltra
Via Monticello di Fara, 32 bis - Sarego (VI) - ITALY - Tel.+39 0444 436489 - Fax +39 0444 835335
http://www.eltra.it E-mail:eltra@eltra.it

ELTRA reserves the right to make any modifications without prior notice